BID DOCUMENTS

Downey Unified
SCHOOL DISTRICT

Bid #22/23-01

Various Sites
Asphalt Paving/Slurry Project
February 23, 2022

DOCUMENT 00 01 10

TABLE OF CONTENTS

Procurement and Contracting Requirements

Division 0	Section	Title
	00 01 01	Project Title Page
	00 01 10	Table of Contents
	00 01 15	List of Drawings

Solicitation

Division 0	Section	Title
	00 11 16	Notice to Bidders

Instructions for Procurement

Division 0	Section	Title
	00 21 13	Instructions to Bidders
	00 21 13.1	Bidder Information and Forms

Available Information

Division 0	Section	Title
	00 31 19	Existing Conditions
	00 31 32	Geotechnical Data

Procurement Forms and Supplements

Division 0	Section	Title
	00 41 13	Bid Form and Proposal
	00 43 13	Bid Bond
	00 43 36	Designated Subcontractors List
	00 45 01	Site Visit Certification
	00 45 19	Non-Collusion Declaration
	00 45 26	Workers' Compensation Certification
	00 45 46.01	Prevailing Wage and Related Labor Requirements Certification
	00 45 46.03	Drug-Free Workplace Certification
	00 45 46.04	Tobacco-Free Environment Certification
	00 45 46.05	Hazardous Materials Certification
	00 45 46.06	Lead-Based Materials Certification
	00 45 46.07	Imported Materials Certification
	00 45 46.08	Criminal Background Investigation/Fingerprinting Certification
	00 45 46.09	Buy American Certification
	00 45 49	Registered Subcontractors List
	00 45 90	Post Bid Interview

Contracting Forms and Supplements

Division 0	Section	Title
	00 51 00	Notice of Award
	00 52 13	Agreement Form – Stipulated Sum (Single-Prime Contract)
	00 55 00	Notice to Proceed
	00 56 00	Escrow Bid Documentation
	00 57 00	Escrow Agreement in Lieu of Retention

Project Forms

Division 0	Section	Title
	00 61 13.13	Performance Bond
	00 61 13.16	Payment Bond
	00 63 40	Allowance Expenditure Directive Form
	00 63 57	Proposed Change Order Form
	00 63 63	Change Order Form
	00 65 19.26	Agreement and Release of Any and All Claims
	00 65 36	Guarantee Form

Conditions of the Contract

Division 0	Section	Title
	00 72 13	General Conditions – Stipulated Sum (Single-Prime Contract)
	00 73 13	Special Conditions
	00 73 56	Hazardous Materials Procedures and Requirements

General Requirements

Division 1	Section	Title
	01 11 00	Summary of Work

Price and Payment Procedures

Division 1	Section	Title
	01 21 00	Allowance
	01 22 00	Alternatives and Unit Prices
	01 25 13	Product Options and Substitutions
	01 26 00	Changes in the Work
	01 29 00	Application for Payment and Conditional and Unconditional Waiver and Release Forms

Administrative Requirements

Division 1	Section	Title
	01 31 19	Project Meetings
	01 32 13	Scheduling of Work
	01 33 00	Submittals
	01 35 13.23	Site Standards

Quality Requirement

Division 1	Section	Title
	01 41 00	Regulatory Requirements
	01 42 13	Abbreviations and Acronyms
	01 42 16	Definitions
	01 42 19	References
	01 43 00	Materials and Equipment
	01 45 00	Quality Control

Temporary Facilities and Controls

Division 1	Section	Title
	01 50 00	Temporary Facilities and Controls
	01 50 13	Construction Waste Management and Disposal
	01 52 13	Field Offices

Product Requirements

Division 1	Section	Title
	01 64 00	Owner-Furnished Products
	01 66 00	Product Delivery, Storage and Handling

Execution and Closeout Requirements

Division 1	Section	Title
	01 71 23	Field Engineering
	01 73 29	Cutting and Patching
	01 76 00	Alteration Project Procedures
	01 77 00	Contract Closeout and Final Cleaning
	01 78 23	Operation and Maintenance Data
	01 78 36	Warranties
	01 78 39	Record Documents

Life Cycle Activities

Division 1	Section	Title
	01 91 00	Commissioning

DOCUMENT 00 01 15

LIST OF DRAWINGS

DRAWINGS

Sheet number Description

For Carpenter ES and District Office:

T-00	Title Sheet
A-01	Site Plan
A-02	Striping Plan
A-03	Asphalt Details
A-04	Parking Details

For Price ES:

T-00	Title Sheet
A-01	Site Plan
A-02	Striping Plan
A-03	Construction Details
A-04	Parking Details

For Ward and Williams ES:

T-00	Title Sheet
A-01	Site Plan
A-02	Striping Plan
A-03	Parking Details

END OF DOCUMENT

DOCUMENT 00 11 16

NOTICE TO BIDDERS

1. Notice is hereby given that the governing board ("Board") of the Downey Unified School District ("District") will receive sealed bids for the following project no later than the specified bid deadline.

   Bid #21/22-14 – Griffith Middle School Asphalt Paving Project

   Bid #22/23-01 – Various School Site Asphalt Paving/Slurry Project

2. The Project consists of:

   Bid #21/22-14 - Miscellaneous asphalt paving needs throughout Griffiths Middle School

   Bid #22/23-01 – Miscellaneous asphalt paving/slurry needs at various sites.

3. To bid on this Project, the Bidder is required to possess one or more of the following State of California contractors' license(s)**:**

   A and/or B

   The Bidder's license(s) must remain active and in good standing throughout the term of the Contract.

4. To bid on this Project, the Bidder is required to be registered as a public works contractor with the Department of Industrial Relations pursuant to the Labor Code.

5. Contract Documents will be available on or after February 23, 2022, by contacting Kay Domingo at kdomingo@dusd.net, or downloaded from the District's website, https://web.dusd.net/purchasing/#bids.

6. Sealed bids will be received until **9 AM March 11, 2022** at the District Facilities Office, Attn: Kay Domingo, 11627 Brookshire Avenue, Downey California 90241 at or after which time the bids will be opened and publicly read aloud. Any bid that is submitted after this time shall be nonresponsive and returned to the bidder. Any claim by a bidder of error in its bid must be made in compliance with section 5100 et seq. of the Public Contract Code.

7. All bids shall be on the form provided by the District. Each bid must conform and be responsive to all pertinent Contract Documents, including, but not limited to, the Instructions to Bidders.

8. A bid bond by an admitted surety insurer on the form provided by the District a cashier's check or a certified check, drawn to the order of the Downey Unified School District, in the amount of ten percent (10%) of the total bid price, shall accompany the Bid Form and Proposal, as a guarantee that the Bidder will, within seven (7)

calendar days after the date of the Notice of Award, enter into a contract with the District for the performance of the services as stipulated in the bid.

9. A mandatory pre-bid conference and site visit will be held on February 23, 2022 at 2:00 PM starting at Griffiths Middle School, 9633 Tweedy Lane, Downey, California 90241 at the front office and then to other various sites. All participants are required to sign in at all locations. Failure to attend or tardiness will render bid ineligible.

10. The successful Bidder shall be required to furnish a 100% Performance Bond and a 100% Payment Bond if it is awarded the Contract for the Work.

11. The successful Bidder may substitute securities for any monies withheld by the District to ensure performance under the Contract, in accordance with the provisions of section 22300 of the Public Contract Code.

12. The Contractor and all Subcontractors under the Contractor shall pay all workers on all Work performed pursuant to this Contract not less than the general prevailing rate of per diem wages and the general prevailing rate for holiday and overtime work as determined by the Director of the Department of Industrial Relations, State of California, for the type of work performed and the locality in which the work is to be performed within the boundaries of the District, pursuant to section 1770 et seq. of the California Labor Code. Prevailing wage rates are also available from the District or on the Internet at: <http://www.dir.ca.gov>.

13. This Project is subject to labor compliance monitoring and enforcement by the Department of Industrial Relations pursuant to Labor Code section 1771.4 and subject to the requirements of Title 8 of the California Code of Regulations. The successful Bidder shall comply with all requirements of Division 2, Part 7, Chapter 1, Articles 1-5 of the Labor Code.

14. The District shall award the Contract, if it awards it at all, to the lowest responsive responsible bidder based on:

    A. The base bid amount only.

15. The Board reserves the right to reject any and all bids and/or waive any irregularity in any bid received. If the District awards the Contract, the security of unsuccessful bidder(s) shall be returned within sixty (60) days from the time the award is made. Unless otherwise required by law, no bidder may withdraw its bid for ninety (90) days after the date of the bid opening.

END OF DOCUMENT

DOCUMENT 00 21 13

INSTRUCTIONS TO BIDDERS

Bidders shall follow the instructions in this document, and shall submit all documents, forms, and information required for consideration of a bid.

Downey Unified School District ("District") will evaluate information submitted by the apparent low Bidder and, if incomplete or unsatisfactory to District, Bidder's bid may be rejected at the sole discretion of District.

16. Bids are requested for a general construction contract, or work described in general, for the following project ("Project" or "Contract"):

    Various Sites Asphalt Paving/Slurry Project

17. A Bidder and its subcontractors must possess the appropriate State of California contractors' license and must maintain the license throughout the duration of the project. Bidders must also be registered as a public works contractor with the Department of Industrial Relations pursuant to the Labor Code. Bids submitted by a contractor who is not properly licensed or registered shall be deemed nonresponsive and will not be considered.

18. District will receive sealed bids from bidders as stipulated in the Notice to Bidders.

    a. All bids must be sealed in an envelope, marked with the name and address of the Bidder, name of the Project, the Project Number and/or bid number, and time of bid opening.

    b. Bids must be submitted to the District Office by date and time shown in the Notice to Bidders.

    c. Bids must contain all documents as required herein.

19. Bidders are advised that on the date that bids are opened, telephones will not be available at the District Offices for use by bidders or their representatives.

20. Bids will be opened at or after the time indicated for receipt of bids.

21. Bidders must submit bids on the documents titled Bid Form and Proposal, and must submit all other required District forms. Bids not submitted on the District's required forms shall be deemed nonresponsive and shall not be considered. Additional sheets required to fully respond to requested information are permissible.

22. Bidders shall not modify the Bid Form and Proposal or qualify their bids. Bidders shall not submit to the District a re-formatted, re-typed, altered, modified, or otherwise recreated version of the Bid Form and Proposal or other District-provided document.

23. Bids shall be clearly written and without erasure or deletions. District reserves the right to reject any bid containing erasures, deletions, or illegible contents.

24. Bidders must supply all information required by each Bid Document. Bids must be full and complete. District reserves the right in its sole discretion to reject any bid as nonresponsive as a result of any error or omission in the bid. Bidders must complete and submit all of the following documents with the Bid Form and Proposal:

    a. Bid Bond on the District's form, or other security.

    b. Designated Subcontractors List.

    c. Site Visit Certification, if a site visit was required.

    d. Non-Collusion Declaration.

25. Bidders must submit with their bids cash, a cashier's check or a certified check payable to District, or a bid bond by an admitted surety insurer of not less than ten percent (10%) of amount of Base Bid, plus all additive alternates ("Bid Bond"). If Bidder chooses to provide a Bid Bond as security, Bidder must use the required form of corporate surety provided by District. The Surety on Bidder's Bid Bond must be an insurer admitted in the State of California and authorized to issue surety bonds in the State of California. Bids submitted without necessary bid security will be deemed nonresponsive and will not be considered.

26. If Bidder to whom the Contract is awarded fails or neglects to enter into the Contract and submit required bonds, insurance certificates, and all other required documents, within **SEVEN (7)** calendar days after the date of the Notice of Award, District may deposit Bid Bond, cash, cashier's check, or certified check for collection, and proceeds thereof may be retained by District as liquidated damages for failure of Bidder to enter into Contract, in the sole discretion of District. It is agreed that calculation of damages District may suffer as a result of Bidder's failure to enter into the Contract would be extremely difficult and impractical to determine and that the amount of the Bidder's required bid security shall be the agreed and conclusively presumed amount of damages.

27. Bidders must submit with the bid the Designated Subcontractors List for those subcontractors who will perform any portion of Work, including labor, rendering of service, or specially fabricating and installing a portion of the Work or improvement according to detailed drawings contained in the plans and specifications, in excess of one half of one percent (0.5%) of total bid. Failure to submit this list when required by law shall result in bid being deemed nonresponsive and the bid will not be considered.

28. All of the listed subcontractors are required to be registered as a public works contractor with the Department of Industrial Relations pursuant to the Labor Code.

    a. An inadvertent error in listing the California contractor license number on the Designated Subcontractors List shall not be grounds for filing a bid protest or grounds for considering the bid nonresponsive if the correct contractor's license number is submitted to the District within 24 hours after the bid opening and the corrected number corresponds with the submitted name and location for that subcontractor.

b. An inadvertent error listing an unregistered subcontractor shall not be grounds for filing a bid protest or grounds for considering the bid nonresponsive provided that any of the following apply:

(1) The subcontractor is registered prior to the bid opening.

(2) The subcontractor is registered and has paid the penalty registration fee within 24 hours after the bid opening.

(3) The subcontractor is replaced by another registered subcontractor pursuant to Public Contract Code section 4107.

29. If a mandatory pre-bid conference and site visit ("Site Visit") is required as referenced in the Notice to Bidders, then Bidders must submit the Site Visit Certification with their Bid. District will transmit to all prospective Bidders of record such Addenda as District in its discretion considers necessary in response to questions arising at the Site Visit. Oral statements shall not be relied upon and will not be binding or legally effective. Addenda issued by the District as a result of the Site Visit, if any, shall constitute the sole and exclusive record and statement of the results of the Site Visit.

30. Bidders shall submit the Non-Collusion Declaration with their bids. Bids submitted without the Non-Collusion Declaration shall be deemed nonresponsive and will not be considered.

31. The Contractor and all Subcontractors under the Contractor shall pay all workers on all work performed pursuant to the Contract not less than the general prevailing rate of per diem wages and the general prevailing rate for holiday and overtime work as determined by the Director of the Department of Industrial Relations, State of California, for the type of work performed and the locality in which the work is to be performed within the boundaries of the District, pursuant to sections 1770 et seq. of the California Labor Code. Copies of the general prevailing rates of per diem wages for each craft, classification, or type of worker needed to execute the Contract, as determined by Director of the Department of Industrial Relations, are available upon request at the District's principal office. Prevailing wage rates are also available on the internet at http://www.dir.ca.gov.

32. Submission of bid signifies careful examination of Contract Documents and complete understanding of the nature, extent, and location of Work to be performed. Bidders must complete the tasks listed below as a condition to bidding, and submission of a bid shall constitute the Bidder's express representation to District that Bidder has fully completed the following:

a. Bidder has visited the Site, if required, and has examined thoroughly and understood the nature and extent of the Contract Documents, Work, Site, locality, actual conditions, as-built conditions, and all local conditions and federal, state and local laws, and regulations that in any manner may affect cost, progress, performance, or furnishing of Work or that relate to any aspect of the means, methods, techniques, sequences, or procedures of construction to be employed by Bidder and safety precautions and programs incident thereto;

b. Bidder has conducted or obtained and has understood all examinations, investigations, explorations, tests, reports, and studies that pertain to the subsurface conditions, as-built conditions, underground facilities, and all other physical conditions at or contiguous to the Site or otherwise that may affect the cost, progress, performance, or furnishing of Work, as Bidder considers necessary for the performance or furnishing of Work at the Contract Sum, within the Contract Time, and in accordance with the other terms and conditions of Contract Documents, including specifically the provisions of the General Conditions; and no additional examinations, investigations, explorations, tests, reports, studies, or similar information or data are or will be required by Bidder for such purposes;

c. Bidder has correlated its knowledge and the results of all such observations, examinations, investigations, explorations, tests, reports, and studies with the terms and conditions of the Contract Documents;

d. Bidder has given the District prompt written notice of all conflicts, errors, ambiguities, or discrepancies that it has discovered in or among the Contract Documents and the actual conditions, and the written resolution(s) thereof by the District is/are acceptable to Bidder;

e. Bidder has made a complete disclosure in writing to the District of all facts bearing upon any possible interest, direct or indirect, that Bidder believes any representative of the District or other officer or employee of the District presently has or will have in this Contract or in the performance thereof or in any portion of the profits thereof;

f. Bidder must, prior to bidding, perform the work, investigations, research, and analysis required by this document and that Bidder represented in its Bid Form and Proposal and the Agreement that it performed prior to bidding. Contractor under this Contract is charged with all information and knowledge that a reasonable bidder would ascertain from having performed this required work, investigation, research, and analysis. Bid prices must include entire cost of all work "incidental" to completion of the Work.

g. Conditions Shown on the Contract Documents: Information as to underground conditions, as-built conditions, or other conditions or obstructions, indicated in the Contract Documents, e.g., on Drawings or in Specifications, has been obtained with reasonable care, and has been recorded in good faith. However, District only warrants, and Bidder may only rely, on the accuracy of limited types of information.

    (1) As to above-ground conditions or as-built conditions shown or indicated in the Contract Documents, there is no warranty, express or implied, or any representation express or implied, that such information is correctly shown or indicated. This information is verifiable by independent investigation and Bidder is required to make such verification as a condition to bidding. In submitting its Bid, Bidder shall rely on the results of its own independent investigation. In submitting its Bid, Bidder shall not rely on District-supplied information regarding above-ground conditions or as-built conditions.

(2) As to any subsurface condition shown or indicated in the Contract Documents, Bidder may rely only upon the general accuracy of actual reported depths, actual reported character of materials, actual reported soil types, actual reported water conditions, or actual obstructions shown or indicated. District is not responsible for the completeness of such information for bidding or construction; nor is District responsible in any way for any conclusions or opinions that the Bidder has drawn from such information; nor is the District responsible for subsurface conditions that are not specifically shown (for example, District is not responsible for soil conditions in areas contiguous to areas where a subsurface condition is shown).

h. Conditions Shown in Reports and Drawings Supplied for Informational Purposes: Reference is made to the document entitled Geotechnical Data, and the document entitled Existing Conditions, for identification of:

(1) Subsurface Conditions: Those reports of explorations and tests of subsurface conditions at or contiguous to the Site that have been utilized by Architect in preparing the Contract Documents; and

(2) Physical Conditions: Those drawings of physical conditions in or relating to existing surface or subsurface structures at or contiguous to the Site that has been utilized by Architect in preparing the Contract Documents.

(3) These reports and drawings are **not** Contract Documents and, except for any "technical" data regarding subsurface conditions specifically identified in Geotechnical Data and Existing Conditions, and underground facilities data, Bidder may not in any manner rely on the information in these reports and drawings. Subject to the foregoing, Bidder must make its own independent investigation of all conditions affecting the Work and must not rely on information provided by District.

33. Bids shall be based on products and systems specified in Contract Documents or listed by name in Addenda. Whenever in the Specifications any materials, process, or article is indicated or specified by grade, patent, or proprietary name, or by name of manufacturer, that Specification shall be deemed to be followed by the words "or equal." Bidder may, unless otherwise stated, offer any material, process, or article that shall be substantially equal or better in every respect to that so indicated or specified. The District is not responsible and/or liable in any way for a Contractor's damages and/or claims related, in any way, to that Contractor's basing its bid on any requested substitution that the District has not approved in advance and in writing. Contractors and materials suppliers who submit requests for substitutions prior to the award of the Contract must do so in writing and in compliance with Public Contract Code section 3400. All requests must comply with the following:

a. District must receive any notice of request for substitution of a specified item a minimum of **TEN (10)** calendar days prior to bid opening. The Successful Bidder will not be allowed to substitute specified items unless properly noticed.

b. Within 35 days after the date of the Notice of Award, the Successful Bidder shall submit data substantiating the request(s) for all substitution(s) containing sufficient information to assess acceptability of product or system and impact on Project, including, without limitation, the requirements specified in the Special Conditions and the Specifications. Insufficient information shall be grounds for rejection of substitution.

c. Approved substitutions, if any, shall be listed in Addenda. District reserves the right not to act upon submittals of substitutions until after bid opening.

d. Substitutions may be requested after Contract has been awarded only if indicated in and in accordance with requirements specified in the Special Conditions and the Specifications.

34. Bidders may examine any available "as-built" drawings of previous work by giving District reasonable advance notice. District will not be responsible for accuracy of "as-built" drawings. The document entitled Existing Conditions applies to all supplied "as-built" drawings.

35. All questions about the meaning or intent of the Contract Documents are to be directed via email to the District to Vince Madsen, vmadsen@dusd.net. Interpretations or clarifications considered necessary by the District in response to such questions will be issued in writing by Addenda and emailed, faxed, mailed, or delivered to all parties recorded by the District as having received the Contract Documents or posted on the District's website at https://web.dusd.net/bids-rfps/Questions received less than **SEVEN (7)** calendar days prior to the date for opening bids may not be answered. Only questions answered by formal written Addenda will be binding. Oral and other interpretations or clarifications will be without legal effect.

36. Addenda may also be issued to modify other parts of the Contract Documents as deemed advisable by the District.

37. Each Bidder must acknowledge each Addendum in its Bid Form and Proposal by number or its Bid shall be considered non-responsive. Each Addendum shall be part of the Contract Documents. A complete listing of Addenda may be secured from the District.

38. This Contract may include alternates. Alternates are defined as alternate products, materials, equipment, systems, methods, or major elements of the construction that may, at the District's option and under terms established in the Contract and pursuant to section 20103.8 of the Public Contract Code, be selected for the Work.

39. The District shall award the Contract, if it awards it at all, to the lowest responsive responsible bidder based on the criteria as indicated in the Notice to Bidders. In the event two or more responsible bidders submit identical bids, the District shall select the Bidder to whom to award the Contract by lot.

40. Discrepancies between written words and figures, or words and numerals, will be resolved in favor of figures or numerals.

41. Bidders in contention for contract awards shall be required to attend a Post-Bid interview, which will be set within three (3) calendar days following bid opening. A

duly authorized representative of the apparent low bidder is required to attend the Post Bid Interview, in person. The apparent low bidder's authorized representative(s) must have (1) knowledge of how the bid submitted was prepared, (2) the person responsible for supervising performance of the Work, and (3) the authority to bind the apparent low bidder. Failure to attend the Post Bid Interview as scheduled will be considered just cause for the District to reject the Bid as nonresponsive.

42. Any bid protest by any Bidder regarding any other bid must be submitted in writing to the District, before 5:00 p.m. of the **THIRD (3rd)** business day following bid opening.

a. Only a Bidder who has actually submitted a bid, and who could be awarded the Contract if the bid protest is upheld, is eligible to submit a bid protest. Subcontractors are not eligible to submit bid protests. A Bidder may not rely on the bid protest submitted by another Bidder.

b. A bid protest must contain a complete statement of any and all bases for the protest and all supporting documentation. Materials submitted after the bid protest deadline will not be considered.

c. The protest must refer to the specific portions of all documents that form the basis for the protest.

(1) Without limitation to any other basis for protest, an inadvertent error in listing the California contractor's license number on the Designated Subcontractors List shall not be grounds for filing a bid protest or grounds for considering the bid nonresponsive if the correct contractor's license number is submitted to the District within 24 hours after the bid opening and the corrected number corresponds with the submitted name and location for that subcontractor.

(2) Without limitation to any other basis for protest, an inadvertent error listing an unregistered subcontractor shall not be grounds for filing a bid protest or grounds for considering the bid nonresponsive provided that any of the following apply:

(a) The subcontractor is registered prior to the bid opening.

(b) The subcontractor is registered and has paid the penalty registration fee within 24 hours after the bid opening.

(c) The subcontractor is replaced by another registered subcontractor pursuant to Public Contract Code section 4107.

d. The protest must include the name, address and telephone number of the person representing the protesting party.

e. The party filing the protest must concurrently transmit a copy of the protest and any attached documentation to all other parties with a direct financial interest that may be adversely affected by the outcome of the protest. Such parties shall include all other bidders or proposers who appear to have a

reasonable prospect of receiving an award depending upon the outcome of the protest.

f. The procedure and time limits set forth in this paragraph are mandatory and are each bidder's sole and exclusive remedy in the event of bid protest. Failure to comply with these procedures shall constitute a waiver of any right to further pursue the bid protest, including filing a Government Code Claim or legal proceedings.

43. The Bidder to whom Contract is awarded shall execute and submit the following documents by 5:00 p.m. of the **SEVENTH (7th)** calendar day following the date of the Notice of Award. Failure to properly and timely submit these documents entitles District to reject the bid as nonresponsive.

a. Agreement: To be executed by successful Bidder. Submit four (4) copies, each bearing an original signature.

b. Escrow of Bid Documentation: This must include all required documentation. See the document titled Escrow Bid Documentation for more information.

c. Performance Bond (100%): On the form provided in the Contract Documents and fully executed as indicated on the form.

d. Payment Bond (Contractor's Labor and Material Bond) (100%): On the form provided in the Contract Documents and fully executed as indicated on the form.

e. Insurance Certificates and Endorsements as required.

f. Workers' Compensation Certification.

g. Prevailing Wage and Related Labor Requirements Certification.

h. Drug-Free Workplace Certification.

i. Tobacco-Free Environment Certification.

j. Hazardous Materials Certification.

k. Lead-Based Materials Certification.

l. Imported Materials Certification.

m. Criminal Background Investigation/Fingerprinting Certification.

n. Registered Subcontractors List: Must include Department of Industrial Relations (DIR) registration number of each subcontractor for all tiers.

44. Time for Completion: District may issue a Notice to Proceed within **NINETY (90)** days from the date of the Notice of Award. Once Contractor has received the Notice to Proceed, Contractor shall complete the Work within the period of time indicated in the Contract Documents.

a. In the event that the District desires to postpone issuing the Notice to Proceed beyond this 90-day period, it is expressly understood that with reasonable notice to the Contractor, the District may postpone issuing the Notice to Proceed.

b. It is further expressly understood by Contractor that Contractor shall not be entitled to any claim of additional compensation as a result of the postponement of the issuance of the Notice to Proceed beyond a 90-day period. If the Contractor believes that a postponement of issuance of the Notice to Proceed will cause a hardship to the Contractor, the Contractor may terminate the Contract. Contractor's termination due to a postponement beyond this 90-day period shall be by written notice to District within **TEN (10)** calendar days after receipt by Contractor of District's notice of postponement.

c. It is further understood by the Contractor that in the event that Contractor terminates the Contract as a result of postponement by the District, the District shall only be obligated to pay Contractor for the Work that Contractor had performed at the time of notification of postponement and which the District had in writing authorized Contractor to perform prior to issuing a Notice to Proceed.

d. Should the Contractor terminate the Contract as a result of a notice of postponement, District shall have the authority to award the Contract to the next lowest responsive responsible bidder.

45. District reserves the right to reject any or all bids, including without limitation the right to reject any or all nonconforming, nonresponsive, unbalanced, or conditional bids, to re-bid, and to reject the bid of any bidder if District believes that it would not be in the best interest of the District to make an award to that bidder, whether because the bid is not responsive or the bidder is unqualified or of doubtful financial ability or fails to meet any other pertinent standard or criteria established by District. District also reserves the right to waive any inconsequential deviations or irregularities in any bid. For purposes of this paragraph, an "unbalanced bid" is one having nominal prices for some work items and/or enhanced prices for other work items.

46. It is the policy of the District that no qualified person shall be excluded from participating in, be denied the benefits of, or otherwise be subjected to discrimination in any consideration leading to the award of contract, based on race, color, gender, sexual orientation, political affiliation, age, ancestry, religion, marital status, national origin, medical condition or disability. The Successful Bidder and its subcontractors shall comply with applicable federal and state laws, including, but not limited to the California Fair Employment and Housing Act, beginning with Government Code section 12900, and Labor Code section 1735.

47. Prior to the award of Contract, District reserves the right to consider the responsibility of the Bidder. District may conduct investigations as District deems necessary to assist in the evaluation of any bid and to establish the responsibility, including, without limitation, qualifications and financial ability of Bidders, proposed subcontractors, suppliers, and other persons and organizations to perform and

furnish the Work in accordance with the Contract Documents to District's satisfaction within the prescribed time.

END OF DOCUMENT

DOCUMENT 00 21 13.1

BIDDER INFORMATION AND FORMS

[INTENTIONALLY LEFT BLANK UNLESS PROVIDED IN SPECIAL CONDITIONS – SEPARATE PREQUALIFICATION PROCESS RECOMMENDED]

END OF DOCUMENT

DOCUMENT 00 31 19

EXISTING CONDITIONS

48. Summary

This document describes existing conditions at or near the Project, and use of information available regarding existing conditions. This document is **not** part of the Contract Documents. See General Conditions for definition(s) of terms used herein.

49. Reports and Information on Existing Conditions

a. Documents providing a general description of the Site and conditions of the Work may have been collected by the Downey Unified School District ("District"), its consultants, contractors, and tenants. These documents may, but are not required to, include previous contracts, contract specifications, tenant improvement contracts, as-built drawings, utility drawings, and information regarding underground facilities.

b. Information regarding existing conditions may be inspected at the District offices or the Construction Manager's offices, if any, and copies may be obtained at cost of reproduction and handling upon Bidder's agreement to pay for such copies. These reports, documents, and other information are **not** part of the Contract Documents. These reports, documents, and other information do **not** excuse Contractor from fulfilling Contractor's obligation to independently investigate any or all existing conditions or from using reasonable prudent measures to avoid damaging existing improvements.

c. Information regarding existing conditions may also be included in the Project Manual, but shall **not** be considered part of the Contract Documents.

d. Prior to commencing this Work, Contractor and the District's representative shall survey the Site to document the condition of the Site. Contractor will record the survey in digital videotape format and provide an electronic copy to the District within fourteen (14) days of the survey.

e. Contractor may also document any pre-existing conditions in writing, provided that both the Contractor and the District's representative agree on said conditions and sign a memorandum documenting the same.

f. The reports and other data or information regarding existing conditions and underground facilities at or contiguous to the Project are the following:

(1) Original Construction Drawings.
(2) Survey of Site.
(3) Geotechnical Report(s).
(4) Hazardous Material Report(s).
(5) Videotaped Survey(s).

50. Use of Information

a. Information regarding existing conditions was obtained only for use of District and its consultants, contractors, and tenants for planning and design and is **not** part of the Contract Documents.

b. District does not warrant, and makes no representation regarding, the accuracy or thoroughness of any information regarding existing conditions. Bidder represents and agrees that in submitting a bid it is not relying on any information regarding existing conditions supplied by District.

c. Under no circumstances shall District be deemed to warrant or represent existing above-ground conditions, as-built conditions, or other actual conditions, verifiable by independent investigation. These conditions are verifiable by Bidder by the performance of its own independent investigation that Bidder must perform as a condition to bidding and Bidder should not and shall not rely on this information or any other information supplied by District regarding existing conditions.

d. Any information shown or indicated in the reports and other data supplied herein with respect to existing underground facilities at or contiguous to the Project may be based upon information and data furnished to District by the District's employees and/or consultants or builders of such underground facilities or others. District does not assume responsibility for the completeness of this information, and Bidder is solely responsible for any interpretation or conclusion drawn from this information.

e. District shall be responsible only for the general accuracy of information regarding underground facilities, and only for those underground facilities that are owned by District, and only where Bidder has conducted the independent investigation required of it pursuant to the Instructions to Bidders, and discrepancies are not apparent.

51. Investigations/Site Examinations

a. Before submitting a bid, each Bidder is responsible for conducting or obtaining any additional or supplementary examinations, investigations, explorations, tests, studies, and data concerning conditions (surface, subsurface, and underground facilities) at or contiguous to the Site or otherwise, that may affect cost, progress, performance, or furnishing of Work or that relate to any aspect of the means, methods, techniques, sequences, or procedures of construction to be employed by Bidder and safety precautions and programs incident thereto or that Bidder deems necessary to determine its Bid for performing and furnishing the Work in accordance with the time, price, and other terms and conditions of Contract Documents.

b. On request, District will provide each Bidder access to the Site to conduct such examinations, investigations, explorations, tests, and studies, as each Bidder deems necessary for submission of a bid. Bidders must fill all holes and clean up and restore the Site to its former condition upon completion of its explorations, investigations, tests, and studies. Such investigations and

Site examinations may be performed during any and all Site visits indicated in the Notice to Bidders and only under the provisions of the Contract Documents, including, but not limited to, proof of insurance and obligation to indemnify against claims arising from such work, and District's prior approval.

END OF DOCUMENT

DOCUMENT 00 31 32

GEOTECHNICAL DATA

52. Summary

This document describes geotechnical data at or near the Project that is in the District's possession available for Contractor's review, and use of data resulting from various investigations. This document is **not** part of the Contract Documents. See General Conditions for definition(s) of terms used herein.

53. Geotechnical Reports

a. Geotechnical reports may have been prepared for and around the Site and/or in connection with the Work by soil investigation engineers hired by Downey Unified School District ("District"), and its consultants, contractors, and tenants.

b. Geotechnical reports may be inspected at the District offices or the Construction Manager's offices, if any, and copies may be obtained at cost of reproduction and handling upon Bidder's agreement to pay for such copies. These reports are **not** part of the Contract Documents.

c. The reports and drawings of physical conditions that may relate to the Project are the following:

_____

54. Use of Data

a. Geotechnical data were obtained only for use of District and its consultants, contractors, and tenants for planning and design and are **not** a part of Contract Documents.

b. Except as expressly set forth below, District does not warrant, and makes no representation regarding, the accuracy or thoroughness of any geotechnical data. Bidder represents and agrees that in submitting a bid it is not relying on any geotechnical data supplied by District, except as specifically allowed below.

c. Under no circumstances shall District be deemed to make a warranty or representation of existing above ground conditions, as-built conditions, geotechnical conditions, or other actual conditions verifiable by independent investigation. These conditions are verifiable by Bidder by the performance of its own independent investigation that Bidder should perform as a condition to bidding and Bidder must not and shall not rely on information supplied by District.

55. Limited Reliance Permitted on Certain Information

a. Reference is made herein for identification of:

Reports of explorations and tests of subsurface conditions at or contiguous to the Site that have been utilized by District in preparation of the Contract Documents.

Drawings of physical conditions in or relating to existing subsurface structures (except underground facilities) that are at or contiguous to the Site and have been utilized by District in preparation of the Contract Documents.

b. Bidder may rely upon the general accuracy of the "technical data" contained in the reports and drawings identified above, but only insofar as it relates to subsurface conditions, provided Bidder has conducted the independent investigation required pursuant to Instructions to Bidders, and discrepancies are not apparent. The term "technical data" in the referenced reports and drawings shall be limited as follows:

(1) The term "technical data" shall include actual reported depths, reported quantities, reported soil types, reported soil conditions, and reported material, equipment or structures that were encountered during subsurface exploration. The term "technical data" does not include, and Bidder may not rely upon, any other data, interpretations, opinions or information shown or indicated in such drawings or reports that otherwise relate to subsurface conditions or described structures.

(2) The term "technical data" shall not include the location of underground facilities.

(3) Bidder may not rely on the completeness of reports and drawings for the purposes of bidding or construction. Bidder may rely upon the general accuracy of the "technical data" contained in such reports or drawings.

(4) Bidder is solely responsible for any interpretation or conclusion drawn from any "technical data" or any other data, interpretations, opinions, or information provided in the identified reports and drawings.

56. Investigations/Site Examinations

a. Before submitting a bid, each Bidder is responsible for conducting or obtaining any additional or supplementary examinations, investigations, explorations, tests, studies, and data concerning conditions (surface, subsurface, and underground facilities) at or contiguous to the Site or otherwise, that may affect cost, progress, performance, or furnishing of Work or that relate to any aspect of the means, methods, techniques, sequences, or procedures of construction to be employed by Bidder and safety precautions and programs incident thereto or that Bidder deems necessary to determine its Bid for performing and furnishing the Work in accordance with the time, price, and other terms and conditions of Contract Documents.

b. On request, District will provide each Bidder access to the Site to conduct such examinations, investigations, explorations, tests, and studies, as each Bidder deems necessary for submission of a bid. Bidders must fill all holes and clean up and restore the Site to its former condition upon completion of its explorations, investigations, tests, and studies. Such investigations and Site examinations may be performed during any and all Site visits indicated in the Notice to Bidders and only under the provisions of the Contract Documents, including, but not limited to, proof of insurance and obligation to indemnify against claims arising from such work, and District's prior approval.

END OF DOCUMENT

DOCUMENT 00 41 13

BID FORM AND PROPOSAL

To: Governing Board of the Downey Unified School District ("District" or "Owner")

From: _____
(Proper Name of Bidder)

The undersigned declares that Bidder has read and understands the Contract Documents, including, without limitation, the Notice to Bidders and the Instructions to Bidders, and agrees and proposes to furnish all necessary labor, materials, and equipment to perform and furnish all work in accordance with the terms and conditions of the Contract Documents, including, without limitation, the Drawings and Specifications of, for the following project known as _____:

CARPENTER ELEMENTARY SCHOOL:

("Project" or "Contract") and will accept in full payment for that Work the following **total** lump sum amount, all taxes included:

_____ dollars $ _____
BASE BID

DISTRICT OFFICE:

("Project" or "Contract") and will accept in full payment for that Work the following **total** lump sum amount, all taxes included:

_____ dollars $ _____
BASE BID

PRICE ELEMENTARY SCHOOL:

("Project" or "Contract") and will accept in full payment for that Work the following **total** lump sum amount, all taxes included:

_____ dollars $ _____
BASE BID

WARD ELEMENTARY SCHOOL:

("Project" or "Contract") and will accept in full payment for that Work the following **total** lump sum amount, all taxes included:

_____ dollars $ _____ ***BASE BID***

WILLIAMS ELEMENTARY SCHOOL:

("Project" or "Contract") and will accept in full payment for that Work the following **total** lump sum amount, all taxes included:

_____ dollars $ _____ ***BASE BID***

[REMAINDER OF PAGE INTENTIONALLY LEFT BLANK

57. The undersigned has reviewed the Work outlined in the Contract Documents and fully understands the scope of Work required in this Proposal, understands the construction and project management function(s) is described in the Contract Documents, and that each Bidder who is awarded a contract shall be in fact a prime contractor, not a subcontractor, to the District, and agrees that its Proposal, if accepted by the District, will be the basis for the Bidder to enter into a contract with the District in accordance with the intent of the Contract Documents.

58. The undersigned has notified the District in writing of any discrepancies or omissions or of any doubt, questions, or ambiguities about the meaning of any of the Contract Documents, and has contacted the Construction Manager before bid date to verify the issuance of any clarifying Addenda.

59. The undersigned agrees to commence work under this Contract on the date established in the Contract Documents and to complete all work within the time specified in the Contract Documents.

60. The liquidated damages clause of the General Conditions and Agreement is hereby acknowledged.

61. It is understood that the District reserves the right to reject this bid and that the bid shall remain open to acceptance and is irrevocable for a period of ninety (90) days.

62. The following documents are attached hereto:

- Bid Bond on the District's form or other security
- Designated Subcontractors List
- Site Visit Certification
- Non-Collusion Declaration

63. Receipt and acceptance of the following Addenda is hereby acknowledged:

No. _____, Dated _____	No. _____, Dated _____
No. _____, Dated _____	No. _____, Dated _____
No. _____, Dated _____	No. _____, Dated _____

64. Bidder acknowledges that the license required for performance of the Work is a _____ _____ license.

65. Bidder hereby certifies that Bidder is able to furnish labor that can work in harmony with all other elements of labor employed or to be employed on the Work.

66. Bidder specifically acknowledges and understands that if it is awarded the Contract, that it shall perform the Work of the Project while complying with all requirements of the Department of Industrial Relations.

67. Bidder hereby certifies that its bid includes sufficient funds to permit Bidder to comply with all local, state or federal labor laws or regulations during the Project, including payment of prevailing wage, and that Bidder will comply with the provisions of Labor Code section 2810(d) if awarded the Contract

68. [Bidder agrees to comply with all requirements of the Project Labor Agreement].

69. Bidder specifically acknowledges and understands that if it is awarded the Contract, that it shall perform the Work of the Project while complying with the Davis Bacon Act, applicable reporting requirements, and any and all other applicable requirements for federal funding. If a conflict exists, the more stringent requirement shall control.

70. Bidder represents that it is competent, knowledgeable, and has special skills with respect to the nature, extent, and inherent conditions of the Work to be performed. Bidder further acknowledges that there are certain peculiar and inherent conditions existent in the construction of the Work that may create, during the Work, unusual or peculiar unsafe conditions hazardous to persons and property.

71. Bidder expressly acknowledges that it is aware of such peculiar risks and that it has the skill and experience to foresee and to adopt protective measures to adequately and safely perform the Work with respect to such hazards.

72. Bidder expressly acknowledges that it is aware that if a false claim is knowingly submitted (as the terms "claim" and "knowingly" are defined in the California False Claims Act, Gov. Code, § 12650 et seq.), the District will be entitled to civil remedies set forth in the California False Claim Act. It may also be considered fraud and the Contractor may be subject to criminal prosecution.

73. The undersigned Bidder certifies that it is, at the time of bidding, and shall be throughout the period of the Contract, licensed by the State of California to do the type of work required under the terms of the Contract Documents and registered as a public works contractor with the Department of Industrial Relations. Bidder further certifies that it is regularly engaged in the general class and type of work called for in the Contract Documents.

Furthermore, Bidder hereby certifies to the District that all representations, certifications, and statements made by Bidder, as set forth in this bid form, are true and correct and are made under penalty of perjury.

Dated this _____ day of _____ 20 ____

Name of Bidder: _____

Type of Organization: _____

Signed by: _____

Title of Signer: _____

Address of Bidder: _____

Taxpayer Identification No. of Bidder: _____

Telephone Number: _____

Fax Number: _____

E-mail: _____ Web Page: _____

Contractor's License No(s): No.: _____ Class: _____ Expiration Date: _____

No.: _____ Class: _____ Expiration Date: _____

No.: _____ Class: _____ Expiration Date: _____

Public Works Contractor Registration No.: _____

END OF DOCUMENT

DOCUMENT 00 43 13

BID BOND

(Note: If Bidder is providing a bid bond as its bid security, Bidder must use this form, NOT a surety company form.)

KNOW ALL PERSONS BY THESE PRESENTS:

That the undersigned,_____, as Principal ("Principal"),

and _____, as Surety ("Surety"), a corporation organized and existing under and by virtue of the laws of the State of California and authorized to do business as a surety in the State of California, are held and firmly bound unto the Downey Unified School District ("District") of Los Angeles County, State of California, as Obligee, in an amount equal to ten percent (10%) of the Base Bid plus alternates, in the sum of

_____ Dollars ($ _____)

lawful money of the United States of America, for the payment of which sum well and truly to be made, we, and each of us, bind ourselves, our heirs, executors, administrators, successors, and assigns, jointly and severally, firmly by these presents.

THE CONDITION OF THIS OBLIGATION IS SUCH that whereas the Principal has submitted a bid to the District for all Work specifically described in the accompanying bid for the following project: _____ ("Project" or "Contract").

NOW, THEREFORE, if the Principal is awarded the Contract and, within the time and manner required under the Contract Documents, after the prescribed forms are presented to Principal for signature, enters into a written contract, in the prescribed form in accordance with the bid, and files two bonds, one guaranteeing faithful performance and the other guaranteeing payment for labor and materials as required by law, and meets all other conditions to the Contract between the Principal and the Obligee becoming effective, or if the Principal shall fully reimburse and save harmless the Obligee from any damage sustained by the Obligee through failure of the Principal to enter into the written contract and to file the required performance and labor and material bonds, and to meet all other conditions to the Contract between the Principal and the Obligee becoming effective, then this obligation shall be null and void; otherwise, it shall be and remain in full force and effect. The full payment of the sum stated above shall be due immediately if Principal fails to execute the Contract within seven (7) days of the date of the District's Notice of Award to Principal.

Surety, for value received, hereby stipulates and agrees that no change, extension of time, alteration or addition to the terms of the Contract or the call for bids, or to the work to be performed thereunder, or the specifications accompanying the same, shall in any way affect its obligation under this bond, and it does hereby waive notice of any such change, extension of time, alteration or addition to the terms of the Contract or the call for bids, or to the work, or to the specifications.

In the event suit is brought upon this bond by the Obligee and judgment is recovered, the Surety shall pay all costs incurred by the Obligee in such suit, including a reasonable attorneys' fee to be fixed by the Court.

If the District awards the bid, the security of unsuccessful bidder(s) shall be returned within sixty (60) days from the time the award is made. Unless otherwise required by law, no bidder may withdraw its bid for ninety (90) days after the date of the bid opening.

IN WITNESS WHEREOF, this instrument has been duty executed by the Principal and Surety above named, on the _____ day of _____, 20___.

_____
Principal

_____
By

_____
Surety

_____
By

_____
Name of California Agent of Surety

_____
Address of California Agent of Surety

_____
Telephone Number of California Agent of Surety

Bidder must attach Power of Attorney and Certificate of Authority for Surety and a Notarial Acknowledgment for all Surety's signatures. The California Department of Insurance must authorize the Surety to be an admitted Surety Insurer.

END OF DOCUMENT

DOCUMENT 00 43 36

DESIGNATED SUBCONTRACTORS LIST
(Public Contact Code Sections 4100-4114)

PROJECT: _____

Bidder acknowledges and agrees that it must clearly set forth below the name, location and California contractor license number of each subcontractor who will perform work or labor or render service to the Bidder in or about the construction of the Work or who will specially fabricate and install a portion of the Work according to detailed drawings contained in the plans and specifications in an amount in excess of one-half of one percent (0.5%) of Bidder's total Base Bid and the kind of Work that each will perform. Vendors or suppliers of materials only do not need to be listed.

Bidder acknowledges and agrees that, if Bidder fails to list as to any portion of Work, or if Bidder lists more than one subcontractor to perform the same portion of Work, Bidder must perform that portion itself or be subjected to penalty under applicable law. In case more than one subcontractor is named for the same kind of Work, state the portion of the kind of Work that each subcontractor will perform.

If alternate bid(s) is/are called for and Bidder intends to use subcontractors different from or in addition to those subcontractors listed for work under the Base Bid, Bidder must list subcontractors that will perform Work in an amount in excess of one half of one percent (0.5%) of Bidder's total Base Bid plus alternate(s).

If further space is required for the list of proposed subcontractors, attach additional copies of page 2 showing the required information, as indicated below.

Subcontractor Name: _____

CA Cont. Lic. #: _____ Location: _____

Portion of Work: _____

Subcontractor Name: _____

CA Cont. Lic. #: _____ Location: _____

Portion of Work: _____

Subcontractor Name: _____

CA Cont. Lic. #: _____ Location: _____

Portion of Work: _____

Subcontractor Name: _____

CA Cont. Lic. #: _____ Location: _____

Portion of Work: _____

Subcontractor Name: _____

CA Cont. Lic. #: _____ Location: _____

Portion of Work: _____

Subcontractor Name: _____

CA Cont. Lic. #: _____ Location: _____

Portion of Work: _____

Subcontractor Name: _____

CA Cont. Lic. #: _____ Location: _____

Portion of Work: _____

Subcontractor Name: _____

CA Cont. Lic. #: _____ Location: _____

Portion of Work: _____

Subcontractor Name: _____

CA Cont. Lic. #: _____ Location: _____

Portion of Work: _____

Subcontractor Name: _____

CA Cont. Lic. #: _____ Location: _____

Portion of Work: _____

Subcontractor Name: _____

CA Cont. Lic. #: _____ Location: _____

Portion of Work: _____

Date: _____

Proper Name of Bidder: _____

Signature: _____

Print Name: _____

Title: _____

END OF DOCUMENT

DOCUMENT 00 45 01

SITE VISIT CERTIFICATION

TO BE EXECUTED BY BIDDER AND SUBMITTED WITH BID
IF SITE VISIT WAS MANDATORY

PROJECT: _____

Check option that applies:

_____ I certify that I visited the Site of the proposed Work, received the attached _____ pages of information, and became fully acquainted with the conditions relating to construction and labor. I fully understand the facilities, difficulties, and restrictions attending the execution of the Work under contract.

_____ I certify that _____ (Bidder's representative) visited the Site of the proposed Work, received the attached _____ pages of information, and became fully acquainted with the conditions relating to construction and labor. The Bidder's representative fully understood the facilities, difficulties, and restrictions attending the execution of the Work under contract.

Bidder fully indemnifies the Downey Unified School District, its Architect, its Engineers, its Construction Manager, and all of their respective officers, agents, employees, and consultants from any damage, or omissions, related to conditions that could have been identified during my visit and/or the Bidder's representative's visit to the Site.

I certify under penalty of perjury under the laws of the State of California that the foregoing is true and correct.

Date: _____

Proper Name of Bidder: _____

Signature: _____

Print Name: _____

Title: _____

ATTACHMENTS:

1.

2.

3.

END OF DOCUMENT

DOCUMENT 00 45 19

NON-COLLUSION DECLARATION
(Public Contract Code Section 7106)

The undersigned declares:

I am the _____ of _____, the party making the foregoing bid.
[Title] [Name of Firm]

The bid is not made in the interest of, or on behalf of, any undisclosed person, partnership, company, association, organization, or corporation. The bid is genuine and not collusive or sham. The bidder has not directly or indirectly induced or solicited any other bidder to put in a false or sham bid. The bidder has not directly or indirectly colluded, conspired, connived, or agreed with any bidder or anyone else to put in a sham bid, or to refrain from bidding. The bidder has not in any manner, directly or indirectly, sought by agreement, communication, or conference with anyone to fix the bid price of the bidder or any other bidder, or to fix any overhead, profit, or cost element of the bid price, or of that of any other bidder. All statements contained in the bid are true. The bidder has not, directly or indirectly, submitted his or her bid price or any breakdown thereof, or the contents thereof, or divulged information or data relative thereto, to any corporation, partnership, company, association, organization, bid depository, or to any member or agent thereof, to effectuate a collusive or sham bid, and has not paid, and will not pay, any person or entity for such purpose.

Any person executing this declaration on behalf of a bidder that is a corporation, partnership, joint venture, limited liability company, limited liability partnership, or any other entity, hereby represents that he or she has full power to execute, and does execute, this declaration on behalf of the bidder.

I declare under penalty of perjury under the laws of the State of California that the foregoing is true and correct and that this declaration is executed on _____,
[Date]

at _____, _____.
[City] [State]

Date: _____

Proper Name of Bidder: _____

Signature: _____

Print Name: _____

Title: _____

END OF DOCUMENT

DOCUMENT 00 45 26

WORKERS' COMPENSATION CERTIFICATION

PROJECT/CONTRACT NO.: _____ between the Downey Unified School District ("District") and _____ ("Contractor" or "Bidder") ("Contract" or "Project").

Labor Code section 3700, in relevant part, provides:

> Every employer except the State shall secure the payment of compensation in one or more of the following ways:
>
> a. By being insured against liability to pay compensation by one or more insurers duly authorized to write compensation insurance in this state; and/or
>
> b. By securing from the Director of Industrial Relations a certificate of consent to self-insure, which may be given upon furnishing proof satisfactory to the Director of Industrial Relations of ability to self-insure and to pay any compensation that may become due to his employees.

I am aware of the provisions of section 3700 of the Labor Code which require every employer to be insured against liability for workers' compensation or to undertake self-insurance in accordance with the provisions of that code, and I will comply with such provisions before commencing the performance of the Work of this Contract.

Date: _____

Proper Name of Contractor: _____

Signature: _____

Print Name: _____

Title: _____

(In accordance with Labor Code sections 1860 and 1861, the above certificate must be signed and filed with the awarding body prior to performing any Work under this Contract.)

END OF DOCUMENT

DOCUMENT 00 45 46.01

PREVAILING WAGE AND RELATED LABOR REQUIREMENTS CERTIFICATION

PROJECT/CONTRACT NO.: _____ between the Downey Unified School District ("District") and _____ ("Contractor" or "Bidder") ("Contract" or "Project").

I hereby certify that I will conform to the State of California Public Works Contract requirements regarding prevailing wages, benefits, on-site audits with 48-hours' notice, payroll records, and apprentice and trainee employment requirements, for all Work on the above Project including, without limitation, labor compliance monitoring and enforcement by the Department of Industrial Relations.

[IF THIS PROJECT USES FEDERAL FUNDS, DISTRICT SHOULD INCLUDE THE FOLLOWING] I hereby certify that I will also conform to the Federal Labor Standards Provisions regarding minimum wages, withholding, payrolls and basic records, apprentice and trainee employment requirements, equal employment opportunity requirements, Copeland Act requirements, Davis-Bacon and Related Act requirements, Contract Work Hours and Safety Standards Act requirements, and any and all other applicable requirements for federal funding for all Work on the above Project.

Date: _____

Proper Name of Contractor: _____

Signature: _____

Print Name: _____

Title: _____

END OF DOCUMENT

DOCUMENT 00 45 46.03

DRUG-FREE WORKPLACE CERTIFICATION

PROJECT/CONTRACT NO.: _____ between the Downey Unified School District ("District") and _____ ("Contractor" or "Bidder") ("Contract" or "Project").

This Drug-Free Workplace Certification form is required from the successful Bidder pursuant to Government Code section 8350 et seq., the Drug-Free Workplace Act of 1990. The Drug-Free Workplace Act of 1990 requires that every person or organization awarded a contract or grant for the procurement of any property or service from any state agency must certify that it will provide a drug-free workplace by doing certain specified acts. In addition, the Act provides that each contract or grant awarded by a state agency may be subject to suspension of payments or termination of the contract or grant, and the contractor or grantee may be subject to debarment from future contracting, if the contracting agency determines that specified acts have occurred.

The District is not a "state agency" as defined in the applicable section(s) of the Government Code, but the District is a local agency and public school district under California law and requires all contractors on District projects to comply with the provisions and requirements of the Drug-Free Workplace Act of 1990.

Contractor must also comply with the provisions of Health & Safety Code section 11362.3 which prohibits the consumption or possession of cannabis or cannabis products in any public place, including school grounds, and specifically on school grounds while children are present.

Contractor shall certify that it will provide a drug-free workplace by doing all of the following:

c. Publishing a statement notifying employees that the unlawful manufacture, distribution, dispensation, possession, or use of a controlled substance is prohibited in the person's or organization's workplace and specifying actions which will be taken against employees for violations of the prohibition.

d. Establishing a drug-free awareness program to inform employees about all of the following:

(1) The dangers of drug abuse in the workplace.

(2) The person's or organization's policy of maintaining a drug-free workplace.

(3) The availability of drug counseling, rehabilitation, and employee-assistance programs.

(4) The penalties that may be imposed upon employees for drug abuse violations.

e. Requiring that each employee engaged in the performance of the contract or grant be given a copy of the statement required above, and that, as a condition of employment on the contract or grant, the employee agrees to abide by the terms of the statement.

I, the undersigned, agree to fulfill the terms and requirements of Government Code section 8355 listed above and will publish a statement notifying employees concerning (a) the prohibition of controlled substance at the workplace, (b) establishing a drug-free awareness program, and (c) requiring that each employee engaged in the performance of the Contract be given a copy of the statement required by section 8355(a), and requiring that the employee agree to abide by the terms of that statement.

I also understand that if the District determines that I have either (a) made a false certification herein, or (b) violated this certification by failing to carry out the requirements of section 8355, that the Contract awarded herein is subject to termination, suspension of payments, or both. I further understand that, should I violate the terms of the Drug-Free Workplace Act of 1990, I may be subject to debarment in accordance with the requirements of the aforementioned Act.

I acknowledge that I am aware of the provisions of and hereby certify that I will adhere to the requirements of the Drug-Free Workplace Act of 1990 and Health and Safety Code section 11362.3.

Date: _____

Proper Name of Contractor: _____

Signature: _____

Print Name: _____

Title: _____

END OF DOCUMENT

DOCUMENT 00 45 46.04

TOBACCO-FREE ENVIRONMENT CERTIFICATION

PROJECT/CONTRACT NO.: _____ between the Downey Unified School District ("District") and _____ ("Contractor" or "Bidder") ("Contract" or "Project").

This Tobacco-Free Environment Certification form is required from the successful Bidder.

Pursuant to, without limitation, 20 U.S.C. section 6083, Labor Code section 6400 et seq., Health & Safety Code section 104350 et seq., Business and Professions Code section 22950 et seq., and District Board policies, all District sites, including the Project site, are tobacco-free environments. Smoking and the use of tobacco products by all persons is prohibited on or in District property. District property includes school buildings, school grounds, school-owned vehicles and vehicles owned by others while on District property. The prohibition on smoking includes the use of any electronic smoking device that creates an aerosol or vapor, in any manner or in any form, and the use of any oral smoking device for the purpose of circumventing the prohibition of tobacco smoking. Further, Health & Safety Code section 11362.3 prohibits the smoking or use of cannabis or cannabis products in any place where smoking tobacco is prohibited.

I acknowledge that I am aware of the District's policy regarding tobacco-free environments at District sites, including the Project site and hereby certify that I will adhere to the requirements of that policy and not permit any of my firm's employees, agents, subcontractors, or my firm's subcontractors' employees or agents, to use tobacco and/or smoke on the Project site.

Date: _____

Proper Name of Contractor: _____

Signature: _____

Print Name: _____

Title: _____

END OF DOCUMENT

DOCUMENT 00 45 46.05

HAZARDOUS MATERIALS CERTIFICATION

PROJECT/CONTRACT NO.: _____ between Downey Unified School District ("District") and _____ ("Contractor" or "Bidder") ("Contract" or "Project").

74. Contractor hereby certifies that no asbestos, or asbestos-containing materials, polychlorinated biphenyl (PCB), or any material listed by the federal or state Environmental Protection Agency or federal or state health agencies as a hazardous material, or any other material defined as being hazardous under federal or state laws, rules, or regulations, ("New Hazardous Material"), shall be furnished, installed, or incorporated in any way into the Project or in any tools, devices, clothing, or equipment used to affect any portion of Contractor's work on the Project for District.

75. Contractor further certifies that it has instructed its employees with respect to the above-mentioned standards, hazards, risks, and liabilities.

76. Asbestos and/or asbestos-containing material shall be defined as all items containing but not limited to chrysotile, crocidolite, amosite, anthophyllite, tremolite, and actinolite. Any or all material containing greater than one-tenth of one percent (0.1%) asbestos shall be defined as asbestos-containing material.

77. Any disputes involving the question of whether or not material is New Hazardous Material shall be settled by electron microscopy or other appropriate and recognized testing procedure, at the District's determination. The costs of any such tests shall be paid by Contractor if the material is found to be New Hazardous Material.

78. All Work or materials found to be New Hazardous Material or Work or material installed with equipment containing New Hazardous Material will be immediately rejected and this Work will be removed at Contractor's expense at no additional cost to the District.

79. Contractor has read and understood the document titled Hazardous Materials Procedures & Requirements, and shall comply with all the provisions outlined therein.

Date: _____

Proper Name of Contractor: _____

Signature: _____

Print Name: _____

Title: _____

END OF DOCUMENT

DOCUMENT 00 45 46.06

LEAD-BASED MATERIALS CERTIFICATION

PROJECT/CONTRACT NO.: _____ between the Downey Unified School District ("District") and _____ ("Contractor" or "Bidder") ("Contract" or "Project").

This certification provides notice to the Contractor that:

(1) Contractor's work may disturb lead-containing building materials.

(2) Contractor shall notify the District if any work may result in the disturbance of lead-containing building materials.

(3) Contractor shall comply with the Renovation, Repair and Painting Rule, if lead-based paint is disturbed in a six-square-foot or greater area indoors or a 20-square-foot or greater area outdoors.

1. Lead as a Health Hazard

Lead poisoning is recognized as a serious environmental health hazard facing children today. Even at low levels of exposure, much lower than previously believed, lead can impair the development of a child's central nervous system, causing learning disabilities, and leading to serious behavioral problems. Lead enters the environment as tiny lead particles and lead dust disburses when paint chips, chalks, peels, wears away over time, or is otherwise disturbed. Ingestion of lead dust is the most common pathway of childhood poisoning; lead dust gets on a child's hands and toys and then into a child's mouth through common hand-to-mouth activity. Exposures may result from construction or remodeling activities that disturb lead paint, from ordinary wear and tear of windows and doors, or from friction on other surfaces.

Ordinary construction and renovation or repainting activities carried out without lead-safe work practices can disturb lead-based paint and create significant hazards. Improper removal practices, such as dry scraping, sanding, or water blasting painted surfaces, are likely to generate high volumes of lead dust.

Because the Contractor and its employees will be providing services for the District, and because the Contractor's work may disturb lead-containing building materials, CONTRACTOR IS HEREBY NOTIFIED of the potential presence of lead-containing materials located within certain buildings utilized by the District. All school buildings built prior to 1978 are presumed to contain some lead-based paint until sampling proves otherwise.

2. Overview of California Law

Education Code section 32240 et seq. is known as the Lead-Safe Schools Protection Act. Under this act, the Department of Health Services is to conduct a sample

survey of schools in the State of California for the purpose of developing risk factors to predict lead contamination in public schools. (Ed. Code, § 32241.)

Any school that undertakes any action to abate existing risk factors for lead is required to utilize trained and state-certified contractors, inspectors, and workers. (Ed. Code, § 32243, subd. (b).) Moreover, lead-based paint, lead plumbing, and solders, or other potential sources of lead contamination, shall not be utilized in the construction of any new school facility or the modernization or renovation of any existing school facility. (Ed. Code, § 32244.)

Both the Federal Occupational Safety and Health Administration ("Fed/OSHA") and the California Division of Occupational Safety and Health ("Cal/OSHA") have implemented safety orders applicable to all construction work where a contractor's employee may be occupationally exposed to lead.

The OSHA Regulations apply to all construction work where a contractor's employee may be occupationally exposed to lead. The OSHA Regulations contain specific and detailed requirements imposed on contractors subject to those regulations. The OSHA Regulations define construction work as work for construction, alteration, and/or repair, including painting and decorating. Regulated work includes, but is not limited to, the following:

a. Demolition or salvage of structures where lead or materials containing lead are present;

b. Removal or encapsulation of materials containing lead;

c. New construction, alteration, repair, or renovation of structures, substrates, or portions thereof, that contain lead, or materials containing lead;

d. Installation of products containing lead;

e. Lead contamination/emergency cleanup;

f. Transportation, disposal, storage, or containment of lead or materials containing lead on the site or location at which construction activities are performed; and

g. Maintenance operations associated with the construction activities described in the subsection.

Because it is assumed by the District that all painted surfaces (interior as well as exterior) within the District contain some level of lead, it is imperative that the Contractor, its workers and subcontractors fully and adequately comply with all applicable laws, rules and regulations governing lead-based materials (including title 8, California Code of Regulations, section 1532.1).

Contractor shall notify the District if any Work may result in the disturbance of lead-containing building materials. Any and all Work that may result in the disturbance of lead-containing building materials shall be coordinated through the District. A signed copy of this Certification shall be on file prior

to beginning Work on the Project, along with all current insurance certificates.

3. Renovation, Repair and Painting Rule, Section 402(c)(3) of the Toxic Substances Control Act

   The EPA requires lead safe work practices to reduce exposure to lead hazards created by renovation, repair and painting activities that disturb lead-based paint. Pursuant to the Renovation, Repair and Painting Rule (RRP), renovations in homes, childcare facilities, and schools built prior to 1978 must be conducted by certified renovations firms, using renovators with training by a EPA-accredited training provider, and fully and adequately complying with all applicable laws, rules and regulations governing lead-based materials, including those rules and regulations appearing within title 40 of the Code of Federal Regulations as part 745 (40 CFR 745).

   The RRP requirements apply to all contractors who disturb lead-based paint in a six-square-foot or greater area indoors or a 20-square-foot or greater area outdoors. If a DPH-certified inspector or risk assessor determines that a home constructed before 1978 is lead-free, the federal certification is not required for anyone working on that particular building.

4. Contractor's Liability

   If the Contractor fails to comply with any applicable laws, rules, or regulations, and that failure results in a site or worker contamination, the Contractor will be held solely responsible for all costs involved in any required corrective actions, and shall defend, indemnify, and hold harmless the District, pursuant to the indemnification provisions of the Contract, for all damages and other claims arising therefrom.

   If lead disturbance is anticipated in the Work, only persons with appropriate accreditation, registrations, licenses, and training shall conduct this Work.

   It shall be the responsibility of the Contractor to properly dispose of any and all waste products, including, but not limited to, paint chips, any collected residue, or any other visual material that may occur from the prepping of any painted surface. It will be the responsibility of the Contractor to provide the proper disposal of any hazardous waste by a certified hazardous waste hauler. This company shall be registered with the Department of Transportation (DOT) and shall be able to issue a current manifest number upon transporting any hazardous material from any school site within the District.

   The Contractor shall provide the District with any sample results prior to beginning Work, during the Work, and after the completion of the Work. The District may request to examine, prior to the commencement of the Work, the lead training records of each employee of the Contractor.

THE CONTRACTOR HEREBY ACKNOWLEDGES, UNDER PENALTY OF PERJURY, THAT IT:

1. HAS RECEIVED NOTIFICATION OF POTENTIAL LEAD-BASED MATERIALS ON THE OWNER'S PROPERTY;

2. IS KNOWLEDGEABLE REGARDING AND WILL COMPLY WITH ALL APPLICABLE LAWS, RULES, AND REGULATIONS GOVERNING WORK WITH, AND DISPOSAL, OF LEAD.

THE UNDERSIGNED WARRANTS THAT HE/SHE HAS THE AUTHORITY TO SIGN ON BEHALF OF AND BIND THE CONTRACTOR. THE DISTRICT MAY REQUIRE PROOF OF SUCH AUTHORITY.

Date: _____

Proper Name of Contractor: _____

Signature: _____

Print Name: _____

Title: _____

END OF DOCUMENT

DOCUMENT 00 45 46.07

IMPORTED MATERIALS CERTIFICATION

PROJECT/CONTRACT NO.: _____ between the Downey Unified School District ("District") and _____ ("Contractor" or "Bidder") ("Contract" or "Project").

This form shall be executed by all entities that, in any way, provide or deliver and/or supply any soils, aggregate, or related materials ("Fill") to the Project Site and shall be provided to the District at least ten (10) days before delivery. All Fill shall satisfy all requirements of any environmental review of the Project performed pursuant to the statutes and guidelines of the California Environmental Quality Act, section 21000 et seq. of the Public Resources Code ("CEQA"), and all requirements of section 17210 et seq. of the Education Code, including requirements for a Phase I environmental assessment acceptable to the State of California Department of Education and Department of Toxic Substances Control.

Certification of:
- □ Delivery Firm/Transporter
- □ Supplier
- □ Manufacturer
- □ Wholesaler
- □ Broker
- □ Retailer
- □ Distributor
- □ Other _____

Type of Entity
- □ Corporation
- □ General Partnership
- □ Limited Partnership
- □ Limited Liability Company
- □ Sole Proprietorship
- □ Other _____

Name of firm ("Firm"): _____

Mailing address: _____

Addresses of branch office used for this Project: _____

If subsidiary, name and address of parent company: _____

_____

By my signature below, I hereby certify that I am aware of section 25260 of the Health and Safety Code and the sections referenced therein regarding the definition of hazardous material. I further certify on behalf of the Firm that all soils, aggregates, or related materials provided, delivered, and/or supplied or that will be provided, delivered, and/or supplied by this Firm to the Project Site are free of any and all hazardous material as defined in section 25260 of the Health and Safety Code. I further certify that I am authorized to make this certification on behalf of the Firm.

Date: _____

Proper Name of Firm: _____

Signature: _____

Print Name: _____

Title: _____

END OF DOCUMENT

DOCUMENT 00 45 46.08

CRIMINAL BACKGROUND INVESTIGATION /FINGERPRINTING CERTIFICATION

PROJECT/CONTRACT NO.: _____between the Downey Unified School District ("District") and _____ ("Contractor" or "Bidder") ("Contract" or "Project").

The undersigned does hereby certify to the governing board of the District as follows:

That I am a representative of the Contractor currently under contract with the District; that I am familiar with the facts herein certified; and that I am authorized and qualified to execute this certificate on behalf of Contractor.

Contractor certifies that it has taken at least one of the following actions with respect to the construction Project that is the subject of the Contract (check all that apply):

x The Contractor is a sole proprietor and intends to comply with the fingerprinting requirements of Education Code section 45125.1(k) with respect to all Contractor's employees who may have contact with District pupils in the course of providing services pursuant to the Contract, and hereby agrees to the District's preparation and submission of fingerprints such that the California Department of Justice may determine that none of those employees has been convicted of a felony, as that term is defined in Education Code section 45122.1. No work shall commence until such determination by DOJ has been made.

As an authorized District official, I am familiar with the facts herein certified, and am authorized to execute this certificate on behalf of the District and undertake to prepare and submit Contractor's fingerprints as if he or she was an employee of the District.

Date: _____

District Representative's Name and Title: _____

District Representative's Signature: _____

☐ The Contractor, who is not a sole proprietor, has complied with the fingerprinting requirements of Education Code section 45125.1 with respect to all Contractor's employees and all of its Subcontractors' employees who may have contact with District pupils in the course of providing services pursuant to the Contract, and the California Department of Justice has determined that none of those employees has been convicted of a felony, as that term is defined in Education Code section 45122.1. A complete and accurate list of Contractor's employees and of all of its subcontractors' employees who may come in contact with District pupils during the course and scope of the Contract is attached hereto; and/or

☐ Pursuant to Education Code section 45125.2, Contractor has installed or will install, prior to commencement of Work, a physical barrier at the Work Site, that will limit contact between Contractor's employees and District pupils at all times; and/or

☐ Pursuant to Education Code section 45125.2, Contractor certifies that all employees will be under the continual supervision of, and monitored by, an employee of the Contractor who the California Department of Justice has ascertained, or as described below, will ascertain, has not been convicted of a violent or serious felony. The name and title of the employee who will be supervising Contractor's and its subcontractors' employees is:

Name: _____

Title: _____

NOTE: If the Contractor is a sole proprietor, and elects the above option, Contractor must have the above-named employee's fingerprints prepared and submitted by the District, in accordance with Education Code section 45125.1(k). No work shall commence until such determination by DOJ has been made.

As an authorized District official, I am familiar with the facts herein certified, and am authorized to execute this certificate on behalf of the District and undertake to prepare and submit Contractor's fingerprints as if he or she was an employee of the District.

Date: _____

District Representative's Name and Title: _____

District Representative's Signature: _____

☐ *The Work on the Contract is either (i) at an unoccupied school site and no employee and/or subcontractor or supplier of any tier of the Contract shall come in contact with the District pupils or (ii) Contractor's employees or any subcontractor or supplier of any tier of the Contract will have only limited contact, if any, with District pupils and the District will take appropriate steps to protect the safety of any pupils that may come in contact with Consultant's employees, subcontractors or suppliers so that the fingerprinting and criminal background investigation requirements of Education Code section 45125.1 shall not apply to Contractor under the Contract.*

As an authorized District official, I am familiar with the facts herein certified, and am authorized to execute this certificate on behalf of the District.

Date: _____

District Representative's Name and Title: _____

District Representative's Signature: _____

Contractor's responsibility for background clearance extends to all of its employees, Subcontractors, and employees of Subcontractors coming into contact with District pupils regardless of whether they are designated as employees or acting as independent contractors of the Contractor.

Date: _____
Proper Name of Contractor: _____
Signature: _____

Print Name: _____

Title: _____

DOCUMENT 00 45 49

REGISTERED SUBCONTRACTORS LIST
(Labor Code Section 1771.1)

PROJECT: _____

Date Submitted (for Updates): _____

Contractor acknowledges and agrees that it must clearly set forth below the name and Department of Industrial Relations (DIR) registration number of each subcontractor **for all tiers** who will perform work or labor or render service to Contractor or its subcontractors in or about the construction of the Work **at least two (2) weeks before the subcontractor is scheduled to perform work**. This document is to be updated as all tiers of subcontractors are identified.

Contractor acknowledges and agrees that, if Contractor fails to list as to any subcontractor of any tier who performs any portion of Work, the Contract is subject to cancellation and the Contractor will be subjected to penalty under applicable law.

If further space is required for the list of proposed subcontractors, attach additional copies of page 2 showing the required information, as indicated below.

Subcontractor Name: _____

DIR Registration #: _____

Portion of Work: _____

Subcontractor Name: _____

DIR Registration #: _____

Portion of Work: _____

Subcontractor Name: _____

DIR Registration #: _____

Portion of Work: _____

Subcontractor Name: _____

DIR Registration #: _____

Portion of Work: _____

Subcontractor Name: _____

DIR Registration #: _____

Portion of Work: _____

Subcontractor Name: _____

DIR Registration #: _____

Portion of Work: _____

Subcontractor Name: _____

DIR Registration #: _____

Portion of Work: _____

Subcontractor Name: _____

DIR Registration #: _____

Portion of Work: _____

Subcontractor Name: _____

DIR Registration #: _____

Portion of Work: _____

Subcontractor Name: _____

DIR Registration #: _____

Portion of Work: _____

Subcontractor Name: _____

DIR Registration #: _____

Portion of Work: _____

Subcontractor Name: _____

DIR Registration #: _____

Portion of Work: _____

Subcontractor Name: _____

DIR Registration #: _____

Portion of Work: _____

Date: _____

Name of Contractor: _____

Signature: _____

Print Name: _____

Title: _____

END OF DOCUMENT

DOCUMENT 00 51 00

NOTICE OF AWARD

Dated: _____ 20__

To: _____ (Contractor)

To: _____
(Address)

From: Governing Board ("Board") of the Downey Unified School District ("District")

Re: _____, Project No. _____ ("Project").

Contractor has been awarded the Contract for the above-referenced Project on _____ _____, 20__, by action of the District's Board.

The Contract Price is _____ Dollars ($_____), and includes alternates _____.

Three (3) copies of each of the Contract Documents (except Drawings) accompany this Notice of Award. Three (3) sets of the Drawings will be delivered separately or otherwise made available. Additional copies are available at cost of reproduction.

You must comply with the following conditions precedent within **SEVEN (7)** calendar days of the date of this Notice of Award.

The Contractor shall execute and submit the following documents by 5:00 p.m. of the **SEVENTH (7th)** calendar day following the date of the Notice of Award.

a. Agreement: To be executed by successful Bidder. Submit three (3) copies, each bearing an original signature.

b. Escrow of Bid Documentation: This must include all required documentation. See the document titled Escrow Bid Documentation for more information.

c. Performance Bond (100%): On the form provided in the Contract Documents and fully executed as indicated on the form.

d. Payment Bond (Contractor's Labor & Material Bond) (100%): On the form provided in the Contract Documents and fully executed as indicated on the form.

e. Insurance Certificates and Endorsements as required.

f. Workers' Compensation Certification.

g. Prevailing Wage and Related Labor Requirements Certification.

h. Drug-Free Workplace Certification.

i. Tobacco-Free Environment Certification.

j. Hazardous Materials Certification.

k. Lead-Based Materials Certification.

l. Imported Materials Certification.

m. Criminal Background Investigation/Fingerprinting Certification.

Failure to comply with these conditions within the time specified will entitle District to consider your bid abandoned, to annul this Notice of Award, and to declare your Bid Security forfeited, as well as any other rights the District may have against the Contractor.

After you comply with those conditions, District will return to you one fully signed counterpart of the Agreement.

DOWNEY UNIFIED SCHOOL DISTRICT

BY: _____

NAME: _____

TITLE: _____

END OF DOCUMENT

DOCUMENT 00 52 13

AGREEMENT

THIS AGREEMENT IS MADE AND ENTERED INTO THIS _____ DAY OF _____ _____, 20___, by and between the Downey Unified School District ("District") and _____ _____ ("Contractor") ("Agreement").

WITNESSETH: That the parties hereto have mutually covenanted and agreed, and by these presents do covenant and agree with each other, as follows:

5. **The Work**: Contractor agrees to furnish all tools, equipment, apparatus, facilities, labor, and material necessary to perform and complete in a good and workmanlike manner, the work of the following project:

   Various Sites Asphalt Paving/Slurry Project ("Project" or "Contract" or "Work")

   It is understood and agreed that the Work shall be performed and completed as required in the Contract Documents including, without limitation, the Drawings and Specifications and submission of all documents required to secure funding or by the Division of the State Architect for close-out of the Project, under the direction and supervision of, and subject to the approval of, the District or its authorized representative.

6. **The Contract Documents**: The complete Contract consists of all Contract Documents as defined in the General Conditions and incorporated herein by this reference. Any and all obligations of the District and Contractor are fully set forth and described in the Contract Documents. All Contract Documents are intended to cooperate so that any Work called for in one and not mentioned in the other or vice versa is to be executed the same as if mentioned in all Contract Documents.

7. **Interpretation of Contract Documents**: Should any question arise concerning the intent or meaning of Contract Documents, including the Drawings or Specifications, the question shall be submitted to the District for interpretation. If a conflict exists in the Contract Documents, valid, written modifications, beginning with the most recent, shall control over this Agreement (if any), which shall control over the Special Conditions, which shall control over any Supplemental Conditions, which shall control over the General Conditions, which shall control over the remaining Division 0 documents, which shall control over Division 1 Documents which shall control over Division 2 through Division 49 documents, which shall control over figured dimensions, which shall control over large-scale drawings, which shall control over small-scale drawings. In the case of a discrepancy or ambiguity solely between and among the Drawings and Specifications, the discrepancy or ambiguity shall be resolved in favor of the interpretation that will provide District with the functionally complete and operable Project described in the Drawings and Specifications. In no case shall a document calling for lower quality and/or quantity material or workmanship control. The decision of the District in the matter shall be final.

8. **Time for Completion**: It is hereby understood and agreed that the Work under this Contract shall be completed within fifty-five (55) consecutive calendar days ("Contract Time") from the date specified in the District's Notice to Proceed.

9. **Completion - Extension of Time**: Should the Contractor fail to complete this Contract, and the Work provided herein, within the time fixed for completion, due allowance being made for the contingencies provided for herein, the Contractor shall become liable to the District for all loss and damage that the District may suffer on account thereof. The Contractor shall coordinate its Work with the Work of all other contractors. The District shall not be liable for delays resulting from Contractor's failure to coordinate its Work with other contractors in a manner that will allow timely completion of Contractor's Work. Contractor shall be liable for delays to other contractors caused by Contractor's failure to coordinate its Work with the Work of other contractors.

10. **Liquidated Damages**: Time is of the essence for all work under this Agreement. It is hereby understood and agreed that it is and will be difficult and/or impossible to ascertain and determine the actual damage that the District will sustain in the event of and by reason of Contractor's delay; therefore, Contractor agrees that it shall pay to the District the sum of one thousand dollars ($1,000.00) per day as liquidated damages for each and every day's delay beyond the time herein prescribed in finishing the Work.
    It is hereby understood and agreed that this amount is not a penalty.
    In the event that any portion of the liquidated damages is not paid to the District, the District may deduct that amount from any money due or that may become due the Contractor under this Agreement, and such deduction does not constitute a withholding or penalty. The District's right to assess liquidated damages is as indicated herein and in the General Conditions.
    The time during which the Contract is delayed for cause, as hereinafter specified, may extend the time of completion for a reasonable time as the District may grant, provided that Contractor has complied with the claims procedure of the Contract Documents. This provision does not exclude the recovery of damages by either party under other provisions in the Contract Documents.

11. **Loss Or Damage**: The District and its agents and authorized representatives shall not in any way or manner be answerable or suffer loss, damage, expense, or liability for any loss or damage that may happen to the Work, or any part thereof, or in or about the same during its construction and before acceptance, and the Contractor shall assume all liabilities of every kind or nature arising from the Work, either by accident, negligence, theft, vandalism, or any cause whatsoever; and shall hold the District and its agents and authorized representatives harmless from all liability of every kind and nature arising from accident, negligence, or any cause whatsoever.

12. **Limitation Of District Liability:** District's financial obligations under this Contract shall be limited to the payment of the compensation provided in this Contract. Notwithstanding any other provision of this Contract, in no event shall District be liable, regardless of whether any claim is based on contract or tort, for any special, consequential, indirect or incidental damages, including, but not limited to, lost

profits or revenue, lost bonding capacity, arising out of or in connection with this Contract for the services performed in connection with this Contract.

13. **Insurance and Bonds**: Prior to issuance of the Notice to Proceed by the District, Contractor shall provide all required certificates of insurance, insurance endorsements, and payment and performance bonds as evidence thereof.

14. **Prosecution of Work**: If the Contractor should neglect to prosecute the Work properly or fail to perform any provisions of this Contract, the District, may, pursuant to the General Conditions and without prejudice to any other remedy it may have, make good such deficiencies and may deduct the cost thereof from the payment then or thereafter due the Contractor.

15. **Authority of Architect, Project Inspector, and DSA**: Contractor hereby acknowledges that the Architect(s), the Project Inspector(s), and the Division of the State Architect ("DSA") have authority to approve and/or suspend Work if the Contractor's Work does not comply with the requirements of the Contract Documents, Title 24 of the California Code of Regulations, and all applicable laws and regulations. The Contractor shall be liable for any delay caused by its non-compliant Work.

16. **Assignment of Contract**: Neither the Contract, nor any part thereof, nor any moneys due or to become due thereunder, may be assigned by the Contractor without the prior written approval of the District, nor without the written consent of the Surety on the Contractor's Performance Bond (the "Surety"), unless the Surety has waived in writing its right to notice of assignment.

17. **Classification of Contractor's License**: Contractor hereby acknowledges that it currently holds valid Type _____ Contractor's license(s) issued by the State of California, Contractors' State License Board, in accordance with division 3, chapter 9, of the Business and Professions Code and in the classification called for in the Contract Documents.

18. **Registration as Public Works Contractor**: The Contractor and all Subcontractors currently are registered as public works contractors with the Department of Industrial Relations, State of California, in accordance with Labor Code section 1771.1.

19. **Payment of Prevailing Wages**: The Contractor and all Subcontractors shall pay all workers on all Work performed pursuant to this Contract not less than the general prevailing rate of per diem wages and the general prevailing rate for holiday and overtime work as determined by the Director of the Department of Industrial Relations, State of California, for the type of work performed and the locality in which the work is to be performed within the boundaries of the District, pursuant to sections 1770 et seq. of the California Labor Code.

20. This Project is subject to labor compliance monitoring and enforcement by the Department of Industrial Relations pursuant to Labor Code section 1771.4 and Title 8 of the California Code of Regulations. Contractor specifically acknowledges and understands that it shall perform the Work of this Agreement while complying with all the applicable provisions of Division 2, Part 7, Chapter 1, of the Labor Code,

including, without limitation, the requirement that the Contractor and all of its Subcontractors shall timely submit complete and accurate electronic certified payroll records as required by the Contract Documents, or the District may not issue payment.

21. **Contract Price**: In consideration of the foregoing covenants, promises, and agreements on the part of the Contractor, and the strict and literal fulfillment of each and every covenant, promise, and agreement, and as compensation agreed upon for the Work and construction, erection, and completion as aforesaid, the District covenants, promises, and agrees that it will well and truly pay and cause to be paid to the Contractor in full, and as the full Contract Price and compensation for construction, erection, and completion of the Work hereinabove agreed to be performed by the Contractor, the following price:

_____ Dollars

($_____),

in lawful money of the United States, which sum is to be paid according to the schedule provided by the Contractor and accepted by the District and subject to additions and deductions as provided in the Contract. This amount supersedes any previously stated and/or agreed to amount(s).

22. **No Representations:** No representations have been made other than as set forth in writing in the Contract Documents, including this Agreement. Each of the Parties to this Agreement warrants that it has carefully read and understood the terms and conditions of this Agreement and all Contract Documents, and that it has not relied upon the representations or advice of any other Party or any attorney not its own.

23. **Entire Agreement:** The Contract Documents, including this Agreement, set forth the entire agreement between the parties hereto and fully supersede any and all prior agreements, understandings, written or oral, between the parties hereto pertaining to the subject matter thereof.

24. **Severability**: If any term, covenant, condition, or provision in any of the Contract Documents is held by a court of competent jurisdiction to be invalid, void or unenforceable, the remainder of the provisions in the Contract Documents shall remain in full force and effect and shall in no way be affected, impaired, or invalidated thereby.

IN WITNESS WHEREOF, accepted and agreed on the date indicated above:

CONTRACTOR	**DOWNEY UNIFIED SCHOOL DISTRICT**
_____	_____
By: _____	By: _____
Title: _____	Title: _____

NOTE: If the party executing this Contract is a corporation, a certified copy of the by-laws, or of the resolution of the Board of Directors, authorizing the officers of said corporation to execute the Contract and the bonds required thereby must be attached hereto.

END OF DOCUMENT

DOCUMENT 00 55 00

NOTICE TO PROCEED

Dated: _____, 20___

TO: _____
("Contractor")

ADDRESS: _____

PROJECT:_____

PROJECT/CONTRACT NO.: _____ between the Downey Unified School District and Contractor ("Contract").

You are notified that the Contract Time under the above Contract will commence to run on _____, 20___. By that date, you are to start performing your obligations under the Contract Documents. In accordance with the Agreement executed by Contractor, the date of completion is _____, 20___.

You must submit the following documents by 5:00 p.m. of the TENTH (10th) calendar day following the date of this Notice to Proceed:

a. Contractor's preliminary schedule of construction.

b. Contractor's preliminary schedule of values for all of the Work.

c. Contractor's preliminary schedule of submittals, including Shop Drawings, Product Data, and Samples submittals

d. Contractor's Safety Plan specifically adapted for the Project.

e. Registered Subcontractors List: A complete subcontractors list for all tiers, including the name, address, telephone number, email address, facsimile number, California State Contractors License number, license classification, Department of Industrial Relations registration number, and monetary value of all Subcontracts.

Thank you. We look forward to a very successful Project.

DOWNEY UNIFIED SCHOOL DISTRICT

BY: _____

NAME: _____

TITLE: _____

END OF DOCUMENT

DOCUMENT 00 56 00

ESCROW BID DOCUMENTATION

1. Requirement to Escrow Bid Documentation

a. Contractor shall submit, within **SEVEN (7)** calendar days after the date of the Notice of Award, one copy of all documentary information received or generated by Contractor in preparation of bid prices for this Contract, as specified herein. This material is referred to herein as "Escrow Bid Documentation." The Escrow Bid Documentation of the Contractor will be held in escrow for the duration of the Contract.

b. Contractor agrees, as a condition of award of the Contract, that the Escrow Bid Documentation constitutes all written information used in the preparation of its bid, and that no other written bid preparation information shall be considered in resolving disputes or claims. Contractor also agrees that nothing in the Escrow Bid Documentation shall change or modify the terms or conditions of the Contract Documents.

c. The Escrow Bid Documentation will not be opened by District except as indicated herein. The Escrow Bid Documentation will be used only for the resolution of change orders and claims disputes.

d. Contractor's submission of the Escrow Bid Documentation, as with the bonds and insurance documents required, is considered an essential part of the Contract award. Should the Contractor fail to make the submission within the allowed time specified above, District may deem the Contractor to have failed to enter into the Contract, and the Contractor shall forfeit the amount of its bid security, accompanying the Contractor's bid, and District may award the Contract to the next lowest responsive responsible bidder.

e. NO PAYMENTS WILL BE MADE, NOR WILL DISTRICT ACCEPT PROPOSED CHANGE ORDERS UNTIL THE ABOVE REQUIRED INFORMATION IS SUBMITTED AND APPROVED.

f. The Escrow Bid Documentation shall be submitted in person by an authorized representative of the Contractor to the District.

2. Ownership of Escrow Bid Documentation

a. The Escrow Bid Documentation is, and shall always remain, the property of Contractor, subject to review by District, as provided herein.

b. Escrow Bid Documentation constitute trade secrets, not known outside Contractor's business, known only to a limited extent and only by a limited number of employees of Contractor, safeguarded while in Contractor's possession, extremely valuable to Contractor, and could be extremely valuable to Contractor's competitors by virtue of reflecting Contractor's contemplated techniques of construction. Subject to the provisions herein,

District agrees to safeguard the Escrow Bid Documentation, and all information contained therein, against disclosure to the fullest extent permitted by law.

3. Format and Contents of Escrow Bid Documentation

a. Contractor may submit Escrow Bid Documentation in its usual cost-estimating format; a standard format is not required. The Escrow Bid Documentation shall be submitted in the language (e.g., English) of the specification.

b. Escrow Bid Documentation must clearly itemize the estimated costs of performing the work of each bid item contained in the bid schedule, separating bid items into sub-items as required to present a detailed cost estimate and allow a detailed cost review. The Escrow Bid Documentation shall include all subcontractor bids or quotes, supplier bids or quotes, quantity takeoffs, crews, equipment, calculations of rates of production and progress, copies of quotes from subcontractors and suppliers, and memoranda, narratives, add/deduct sheets, and all other information used by the Contractor to arrive at the prices contained in the bid proposal. Estimated costs should be broken down into Contractor's usual estimate categories such as direct labor, repair labor, equipment ownership and operation, expendable materials, permanent materials, and subcontract costs as appropriate. Plant and equipment and indirect costs should be detailed in the Contractor's usual format. The Contractor's allocation of indirect costs, contingencies, markup, and other items to each bid item shall be identified.

c. All costs shall be identified. For bid items amounting to less than $10,000, estimated unit costs are acceptable without a detailed cost estimate, provided that labor, equipment, materials, and subcontracts, as applicable, are included and provided that indirect costs, contingencies, and markup, as applicable, are allocated.

d. Bid Documentation provided by District should not be included in the Escrow Bid Documentation unless needed to comply with the following requirements.

4. Submittal of Escrow Bid Documentation

a. The Escrow Bid Documentation shall be submitted by the Contractor in a sealed container within **SEVEN (7)** calendar days after the date of the Notice of Award. The container shall be clearly marked on the outside with the Contractor's name, date of submittal, project name and the words "Escrow Bid Documentation – Intended to be opened in the presence of Authorized Representatives of Both District and Contractor".

b. By submitting Escrow Bid Documentation, Contractor represents that the material in the Escrow Bid Documentation constitutes all the documentary information used in preparation of the bid and that the Contractor has personally examined the contents of the Escrow Bid Documentation container and has found that the documents in the container are complete.

c. If Contractor's proposal is based upon subcontracting any part of the work, each subcontractor whose total subcontract price exceeds 5 percent of the total contract price proposed by Contractor, shall provide separate Escrow Documents to be included with those of Contractor. Those documents shall be opened and examined in the same manner and at the same time as the examination described above for Contractor.

d. If Contractor wishes to subcontract any portion of the Work after award, District retains the right to require Contractor to submit Escrow Documents for the Subcontractor before the subcontract is approved.

5. Storage, Examination and Final Disposition of Escrow Bid Documentation

a. The Escrow Bid Documentation will be placed in escrow, for the life of the Contract, in a mutually agreeable institution. The cost of storage will be paid by Contractor for the duration of the project until final Contract payment. The storage facilities shall be the appropriate size for all the Escrow Bid Documentation and located conveniently to both District's and Contractor's offices.

b. The Escrow Bid Documentation shall be examined by both District and Contractor, at any time deemed necessary by either District or Contractor, to assist in the negotiation of price adjustments and change orders or the settlement of disputes and claims. In the case of legal proceedings, Escrow Bid Documentation shall be used subject to the terms of an appropriate protective order if requested by Contractor and ordered by a court of competent jurisdiction. Examination of the Escrow Bid Documentation is subject to the following conditions:

(1) As trade secrets, the Escrow Bid Documentation is proprietary and confidential to the extent allowed by law.

(2) District and Contractor shall each designate, in writing to the other party **SEVEN (7)** calendar days prior to any examination, the names of representatives who are authorized to examine the Escrow Bid Documentation. No other person shall have access to the Escrow Bid Documentation.

(3) Access to the documents may take place only in the presence of duly designated representatives of the District and Contractor. If Contractor fails to designate a representative or appear for joint examination on **SEVEN (7)** calendar days' notice, then the District representative may examine the Escrow Bid Documents alone upon an additional **THREE (3)** calendar days' notice if a representative of the Contractor does not appear at the time set.

(4) If a subcontractor has submitted sealed information to be included in the Escrow Bid Documents, access to those documents may take place only in the presence of a duly designated representative of the District, Contractor and that subcontractor. If that subcontractor fails to designate a representative or appear for joint examination on **SEVEN**

(7) calendar days' notice, then the District representative and/or the Contractor may examine the Escrow Bid Documentation without that subcontractor present upon an additional **THREE (3)** calendar days' notice if a representative of that subcontractor does not appear at the time set.

c. The Escrow Bid Documentation will be returned to Contractor at such time as the Contract has been completed and final settlement has been achieved.

END OF DOCUMENT

DOCUMENT 00 57 00

ESCROW AGREEMENT IN LIEU OF RETENTION
(Public Contact Code Section 22300)

(Note: Contractor must use this form.)

This Escrow Agreement in Lieu of Retention ("Escrow Agreement") is made and entered into this _____ day of _____, 20___, by and between the Downey Unified School District ("District"), whose address is 11627 Brookshire Avenue , Downey , California 90241 , and _____ ("Contractor"), whose address is _____ , and _____ ("Escrow Agent"), a state or federally chartered bank in the state of California, whose address is _____.

For the consideration hereinafter set forth, District, Contractor, and Escrow Agent agree as follows:

25. Pursuant to section 22300 of Public Contract Code of the State of California, which is hereby incorporated by reference, Contractor has the following two (2) options:

    ☐ Deposit securities with Escrow Agent as a substitute for retention earnings required to be withheld by District pursuant to the Construction Contract No.___ entered into between District and Contractor for the _____ _____ Project, in the amount of _____ Dollars ($_____) dated, _____, 20_____, (the "Contract"); **or**

    ☐ On written request of Contractor, District shall make payments of the retention earnings for the above referenced Contract directly to Escrow Agent.

    When Contractor deposits the securities as a substitute for Contract earnings (first option), Escrow Agent shall notify District within ten (10) calendar days of the deposit. The market value of the securities at the time of substitution and at all times from substitution until the termination of the Escrow Agreement shall be at least equal to the cash amount then required to be withheld as retention under the terms of the Contract between District and Contractor.

    Securities shall be held in the name of Downey Unified School District, and shall designate Contractor as beneficial owner.

26. District shall make progress payments to Contractor for those funds which otherwise would be withheld from progress payments pursuant to Contract provisions, provided that Escrow Agent holds securities in form and amount specified above.

27. When District makes payment of retentions earned directly to Escrow Agent, Escrow Agent shall hold them for the benefit of Contractor until the time that the escrow created under this Escrow Agreement is terminated. Contractor may direct the investment of the payments into securities. All terms and conditions of this Escrow Agreement and the rights and responsibilities of the Parties shall be equally applicable and binding when District pays Escrow Agent directly.

28. Contractor shall be responsible for paying all fees for the expenses incurred by Escrow Agent in administering the Escrow Account, and all expenses of District. The District will charge Contractor $_____ for each of District's deposits to the escrow account. These expenses and payment terms shall be determined by District, Contractor, and Escrow Agent.

29. Interest earned on securities or money market accounts held in escrow and all interest earned on that interest shall be for sole account of Contractor and shall be subject to withdrawal by Contractor at any time and from time to time without notice to District.

30. Contractor shall have the right to withdraw all or any part of the principal in the Escrow Account only by written notice to Escrow Agent accompanied by written authorization from District to Escrow Agent that District consents to withdrawal of amount sought to be withdrawn by Contractor.

31. District shall have the right to draw upon the securities and/or withdraw amounts from the Escrow Account in the event of default by Contractor. Upon seven (7) days' written notice to Escrow Agent from District of the default, if applicable, Escrow Agent shall immediately convert the securities to cash and shall distribute the cash as instructed by District. Escrow Agent shall not be authorized to determine the validity of any notice of default given by District pursuant to this paragraph, and shall promptly comply with District's instructions to pay over said escrowed assets. Escrow Agent further agrees to not interplead the escrowed assets in response to a conflicting demand.

32. Upon receipt of written notification from District certifying that the Contract is final and complete, and that Contractor has complied with all requirements and procedures applicable to the Contract, Escrow Agent shall release to Contractor all securities and interest on deposit less escrow fees and charges of the Escrow Account. The escrow shall be closed immediately upon disbursement of all monies and securities on deposit and payments of fees and charges.

33. Escrow Agent shall rely on written notifications from District and Contractor pursuant to Paragraphs 5 through 8, inclusive, of this Escrow Agreement and District and Contractor shall hold Escrow Agent harmless from Escrow Agent's release and disbursement of securities and interest as set forth above.

[REMAINDER OF PAGE INTENTIONALLY LEFT BLANK]

34. Names of persons who are authorized to give written notice or to receive written notice on behalf of District and on behalf of Contractor in connection with the foregoing, and exemplars of their respective signatures are as follows:

On behalf of District:	On behalf of Contractor:
Title	Title
Name	Name
Signature	Signature
Address	Address

On behalf of Escrow Agent:

Title

Name

Signature

Address

At the time that the Escrow Account is opened, District and Contractor shall deliver to Escrow Agent a fully executed copy of this Agreement.

IN WITNESS WHEREOF, the parties have executed this Agreement by their proper officers on the date first set forth above.

On behalf of District:	On behalf of Contractor:
Title	Title
Name	Name
Signature	Signature
Address	Address

END OF DOCUMENT

DOCUMENT 00 61 13.13

PERFORMANCE BOND
(100% of Contract Price)

(Note: Contractor must use this form, NOT a surety company form.)

KNOW ALL PERSONS BY THESE PRESENTS:

WHEREAS, the governing board ("Board") of the Downey Unified School District, ("District") and ___ _____ ("Principal") have entered into a contract for the furnishing of all materials and labor, services and transportation, necessary, convenient, and proper to perform the following project:

Griffith Middle School Asphalt Paving Project

("Project" or "Contract") which Contract dated _____, 20___, and all of the Contract Documents attached to or forming a part of the Contract, are hereby referred to and made a part hereof; and

WHEREAS, said Principal is required under the terms of the Contract to furnish a bond for the faithful performance of the Contract.

NOW, THEREFORE, the Principal and _____ _____ ("Surety") are held and firmly bound unto the Board of the District in the penal sum of

_____

Dollars ($_____), lawful money of the United States, for the payment of which sum well and truly to be made we bind ourselves, our heirs, executors, administrators, successors, and assigns jointly and severally, firmly by these presents, to:

- Promptly perform all the work required to complete the Project; and

- Pay to the District all damages the District incurs as a result of the Principal's failure to perform all the Work required to complete the Project.

Or, at the District's sole discretion and election, the Surety shall obtain a bid or bids for completing the Contract in accordance with its terms and conditions, and upon determination by the District of the lowest responsible bidder, arrange for a contract between such bidder and the District and make available as Work progresses sufficient funds to pay the cost of completion less the "balance of the Contract Price," and to pay and perform all obligations of Principals under the Contract, including, without limitation, all obligations with respect to warranties, guarantees and the payment of liquidated damages. The term "balance of the Contract Price," as used in this paragraph, shall mean the total amount payable to Principal by the District under the Contract and any modifications thereto, less the amount previously paid by the District to the Principal, less any withholdings by the District allowed under the Contract. District shall not be required or obligated to accept a tender of a completion contractor from the Surety for any or no reason.

The condition of the obligation is such that, if the above bound Principal, its heirs, executors, administrators, successors, or assigns, shall in all things stand to and abide by, and well and truly keep and perform the covenants, conditions, and agreements in the Contract and any alteration thereof made as therein provided, on its part to be kept and performed at the time and in the intent and meaning, including all contractual guarantees and warrantees of materials and workmanship, and shall indemnify and save harmless the District, its trustees, officers and agents, as therein stipulated, then this obligation shall become null and void, otherwise it shall be and remain in full force and virtue.

Surety expressly agrees that the District may reject any contractor or subcontractor proposed by Surety to fulfill its obligations in the event of default by the Principal. Surety shall not utilize Principal in completing the Work nor shall Surety accept a Bid from Principal for completion of the Work if the District declares the Principal to be in default and notifies Surety of the District's objection to Principal's further participation in the completion of the Work.

As a condition precedent to the satisfactory completion of the Contract, the above obligation shall hold good for a period equal to the warranty and/or guarantee period of the Contract, during which time Surety's obligation shall continue if Contractor shall fail to make full, complete, and satisfactory repair and replacements and totally protect the District from loss or damage resulting from or caused by defective materials or faulty workmanship. The obligations of Surety hereunder shall continue so long as any obligation of Contractor remains. Nothing herein shall limit the District's rights or the Contractor or Surety's obligations under the Contract, law or equity, including, but not limited to, California Code of Civil Procedure section 337.15.

The Surety, for value received, hereby stipulates and agrees that no change, extension of time, alteration, or addition to the terms of the contract or to the work to be performed thereunder or the specifications accompanying the same shall in any way affect its obligation on this bond. The Surety also stipulates and agrees that it shall not be exonerated or released from the obligation of this bond by any overpayment or underpayment by the District that is based upon estimates approved by the Architect. The Surety does hereby waive notice of any such change, extension of time, alteration, or addition to the terms of the Contract or to the work or to the specifications.

IN WITNESS WHEREOF, two (2) identical counterparts of this instrument, each of which shall for all purposes be deemed an original thereof, have been duly executed by the Principal and Surety above named, on the _____ day of _____, 20___.

Principal	Surety
By	By
	Name of California Agent of Surety
	Address of California Agent of Surety
	Telephone No. of California Agent of Surety

Contractor must attach a Notarial Acknowledgment for all Surety's signatures and a Power of Attorney and Certificate of Authority for Surety. The California Department of Insurance must authorize the Surety to be an admitted surety insurer.

END OF DOCUMENT

DOCUMENT 00 61 13.16

PAYMENT BOND
Contractor's Labor & Material Bond
(100% Of Contract Price)

(Note: Contractor must use this form, NOT a surety company form.)

KNOW ALL PERSONS BY THESE PRESENTS:

WHEREAS, the governing board ("Board") of the Downey Unified School District, ("District") and _____, ("Principal") have entered into a contract for the furnishing of all materials and labor, services and transportation, necessary, convenient, and proper to perform the following project:

Various Sites Asphalt Paving/Slurry Project

("Project" or "Contract") which Contract dated _____, 20___, and all of the Contract Documents attached to or forming a part of the Contract, are hereby referred to and made a part hereof; and

WHEREAS, pursuant to law and the Contract, the Principal is required, before entering upon the performance of the work, to file a good and sufficient bond with the body by which the Contract is awarded in an amount equal to one hundred percent (100%) of the Contract price, to secure the claims to which reference is made in sections 9000 through 9510 and 9550 through 9566 of the Civil Code, and division 2, part 7, of the Labor Code.

NOW, THEREFORE, the Principal and _____ _____ ("Surety") are held and firmly bound unto all laborers, material men, and other persons referred to in said statutes in the sum of _____ Dollars ($_____), lawful money of the United States, being a sum not less than the total amount payable by the terms of Contract, for the payment of which sum well and truly to be made, we bind ourselves, our heirs, executors, administrators, successors, or assigns, jointly and severally, by these presents.

The condition of this obligation is that if the Principal or any of its subcontractors, or their heirs, executors, administrators, successors, or assigns of any, all, or either of them shall fail to pay for any labor, materials, provisions, or other supplies, used in, upon, for or about the performance of the work contracted to be done, or for any work or labor thereon of any kind, or for amounts required to be deducted, withheld, and paid over to the Employment Development Department from the wages of employees of the Principal or any of his or its subcontractors of any tier under Section 13020 of the Unemployment Insurance Code with respect to such work or labor, that the Surety will pay the same in an amount not exceeding the amount herein above set forth, and also in case suit is brought upon this bond, will pay a reasonable attorney's fee to be awarded and fixed by the court, and to be taxed as costs and to be included in the judgment therein rendered.

It is hereby expressly stipulated and agreed that this bond shall inure to the benefit of any and all persons, companies, and corporations entitled to file claims under section 9100 of

the Civil Code, so as to give a right of action to them or their assigns in any suit brought upon this bond.

Should the condition of this bond be fully performed, then this obligation shall become null and void; otherwise it shall be and remain in full force and affect.

And the Surety, for value received, hereby stipulates and agrees that no change, extension of time, alteration, or addition to the terms of Contract or the specifications accompanying the same shall in any manner affect its obligations on this bond, and it does hereby waive notice of any such change, extension, alteration, or addition.

IN WITNESS WHEREOF, two (2) identical counterparts of this instrument, each of which shall for all purposes be deemed an original thereof, have been duly executed by the Principal and Surety above named, on the _____ day of _____, 20___.

Principal	Surety
By	By
	Name of California Agent of Surety
	Address of California Agent of Surety
	Telephone No. of California Agent of Surety

Contractor must attach a Notarial Acknowledgment for all Surety's signatures and a Power of Attorney and Certificate of Authority for Surety. The California Department of Insurance must authorize the Surety to be an admitted surety insurer.

END OF DOCUMENT

DOCUMENT 00 63 40

ALLOWANCE EXPENDITURE DIRECTIVE FORM

Downey Unified School District
11627 Brookshire Avenue
Downey , CA 90241

ALLOWANCE EXPENDITURE DIRECTIVE NO.:

ALLOWANCE EXPENDITURE DIRECTIVE

Project: _____ **Date: _____**
DSA File No.:_____
Bid No.: _____ **DSA Appl. No._____**

The following parties agree to the terms of this Allowance Expenditure Directive ("AED"):

Owner Name, Address, Telephone:

_____
_____
_____

Contractor Name, Address, Telephone:

_____
_____
_____

Reference	**Description**	**Allowance Authorized for Expenditure**
Request for AED # Requested by: Performed by: Reason:	[Description of unforeseen item relating to Work] [Requester] [Performer] [Reason]	$
Request for AED # Requested by: Performed by: Reason:	[Description of unforeseen item relating to Work] [Requester] [Performer] [Reason]	$
Request for AED # Requested by: Performed by: Reason:	[Description of unforeseen item relating to Work] [Requester] [Performer] [Reason]	$

Total Contract Allowance Amount:	$
Amount of Previously Approved Allowance Expenditure Directive(s):	$

Amount of this Allowance Expenditure Directive:	$

The undersigned Contractor approves the foregoing release of allowance for completion of each specified item, and agrees to furnish all labor, materials and services and perform all work necessary to complete any additional work specified for the consideration stated therein ("Work"). Submission of sums which have no basis in fact or which Contractor knows are false are at the sole risk of Contractor and may be a violation of the False Claims Act set forth under Government Code section 12650, et seq.

This Allowance Expenditure Directive must be signed by an authorized District representative.

It is expressly understood that the authorized allowance expenditure granted herein represent a full accord and satisfaction for any and all cost impacts of the items herein, and Contractor waives any and all further compensation based on the items herein. The value of the extra work or changes expressly includes any and all of the Contractor's costs and expenses, and its subcontractors, both direct and indirect. Any costs, expenses, or damages not included are deemed waived.

Signatures:

DISTRICT: DOWNEY UNIFIED SCHOOL DISTRICT Date: _____ By:_____ [Print Name and Title here]	**CONTRACTOR:** _____ Date: _____ By:_____ [Print Name and Title here]
ARCHITECT: _____ Date: _____ By:_____ [Print Name and Title here]	**PROJECT INSPECTOR:** _____ Date: _____ By:_____ [Print Name and Title here]

END OF DOCUMENT

DOCUMENT 00 63 57

PROPOSED CHANGE ORDER FORM

Downey Unified School District
11627 Brookshire Avenue
Downey , CA 90241

PCO NO.:

Project: _____
Bid No.: _____
RFI #:_____

Date: _____
DSA File No.: _____
DSA Appl. No.:_____

Contractor hereby submits for District's review and evaluation this Proposed Change Order ("PCO"), submitted in accordance with and subject to the terms of the Contract Documents, including Sections 17.7 and 17.8 of the General Conditions. Any spaces left blank below are deemed no change to cost or time.

Contractor understands and acknowledges that documentation supporting Contractor's PCO must be attached and included for District review and evaluation. Contractor further understands and acknowledges that failure to include documentation sufficient to, in District's discretion, support some or all of the PCO, shall result in a rejected PCO.

	WORK PERFORMED OTHER THAN BY CONTRACTOR	**ADD**	**DEDUCT**
(a)	**Material** (attach suppliers' invoice or itemized quantity and unit cost plus sales tax)		
(b)	**Add Labor** (attach itemized hours and rates, fully encumbered)		
(c)	**Add Equipment** (attach suppliers' invoice)		
(d)	**Subtotal**		
(e)	**Add overhead and profit for any and all tiers of Subcontractor**, the total not to exceed ten percent (10%) of Item (d)		
(f)	**Subtotal**		
(g)	**Add Overhead and Profit for Contractor**, not to exceed five percent (5%) of Item (f)		
(h)	**Subtotal**		
(i)	**Add Bond and Insurance**, not to exceed one and a half percent (1.5%) of Item (h)		
(j)	**TOTAL**		
(k)	**Time** (zero unless indicated; "TBD" not permitted)	**_____ Calendar Days**	

[REMAINDER OF PAGE LEFT BLANK INTENTIONALLY]

	WORK PERFORMED BY CONTRACTOR	**ADD**	**DEDUCT**
(a)	**Material** (attach itemized quantity and unit cost plus sales tax)		
(b)	**Add Labor** (attach itemized hours and rates, fully encumbered)		
(c)	**Add Equipment** (attach suppliers' invoice)		
(d)	**Subtotal**		
(e)	**Add Overhead and Profit for Contractor**, not to exceed fifteen percent (15%) of Item (d)		
(f)	**Subtotal**		
(g)	**Add Bond and Insurance**, not to exceed one and a half percent (1.5%) of Item (f)		
(h)	**TOTAL**		
(i)	**Time** (zero unless indicated; "TBD" not permitted)	**____ Calendar Days**	

The undersigned Contractor approves the foregoing as to the changes, if any, to the Contract Price specified for each item, and as to the extension of time allowed, if any, for completion of the entire Work as stated herein, and agrees to furnish all labor, materials, and service, and perform all work necessary to complete any additional work specified for the consideration stated herein. Submission of sums which have no basis in fact or which Contractor knows are false are at the sole risk of Contractor and may be a violation of the False Claims Act set forth under Government Code section 12650 et seq. It is understood that the changes herein to the Contract shall only be effective when approved by the governing board of the District.

It is expressly understood that the value of the extra Work or changes expressly includes any and all of the Contractor's costs and expenses, direct and indirect, resulting from additional time required on the Project or resulting from delay to the Project including, without limitation, cumulative impacts. Contractor is not entitled to separately recover amounts for overhead or other indirect costs. Any costs, expenses, damages, or time extensions not included are deemed waived.

SUBMITTED BY:

Contractor:

_____ _____

[Name] Date

END OF DOCUMENT

DOCUMENT 00 63 63

CHANGE ORDER FORM

Downey Unified School District
11627 Brookshire Avenue
Downey , CA 90241

CHANGE ORDER NO.:

CHANGE ORDER

Project: _____
Bid No.: _____

Date: _____
DSA File No.: _____
DSA Appl. No.:_____

The following parties agree to the terms of this Change Order:

Owner: _____
[Name / Address]
_____
_____

Contractor: _____
[Name / Address]
_____
_____

Architect: _____
[Name / Address]
_____
_____

Project Inspector: _____
[Name / Address]
_____
_____

Reference	**Description**	**Cost**	**Days Ext.**
PCO # Requested by: Performed by: Reason:	[Description of change] [Requester] [Performer] [Reason]	$	
PCO # Requested by: Performed by: Reason:	[Description of change] [Requester] [Performer] [Reason]	$	
PCO # Requested by: Performed by: Reason:	[Description of change] [Requester] [Performer] [Reason]	$	

Contract time will be adjusted as follows: Previous Completion Date: [Date] _____[#] Calendar Days Extension (zero unless otherwise indicated) Current Completion Date: [Date]	Original Contract Amount:	$
	Amount of Previously Approved Change Order(s):	$
	Amount of this Change Order:	$
	Contract Amount:	$

The undersigned Contractor approves the foregoing as to the changes, if any, to the Contract Price specified for each item, and as to the extension of time allowed, if any, for completion of the entire work as stated therein, and agrees to furnish all labor, materials and services and perform all work necessary to complete any additional work specified for the consideration stated therein. Submission of sums which have no basis in fact or which Contractor knows are false are at the sole risk of Contractor and may be a violation of the False Claims Act set forth under Government Code section 12650 et seq.

This change order is subject to approval by the governing board of this District and must be signed by the District. Until such time as this change order is approved by the District's governing board and executed by a duly authorized District representative, this change order is not effective and not binding.

It is expressly understood that the compensation and time, if any, granted herein represent a full accord and satisfaction for any and all time and cost impacts of the items herein, and Contractor waives any and all further compensation or time extension based on the items herein. The value of the extra work or changes expressly includes any and all of the Contractor's costs and expenses, and its subcontractors, both direct and indirect, resulting from additional time required on the project or resulting from delay to the project including without limitation, cumulative impacts. Any costs, expenses, damages or time extensions not included are deemed waived.

Signatures:

District:		Contractor:	
_____	_____	_____	_____
[Name]	Date	[Name]	Date
Architect:		Project Inspector:	
_____	_____	_____	_____
[Name]	Date	[Name]	Date

END OF DOCUMENT

DOCUMENT 00 65 19.26

AGREEMENT AND RELEASE OF ANY AND ALL CLAIMS

THIS AGREEMENT AND RELEASE OF CLAIMS ("Agreement and Release") IS MADE AND ENTERED INTO THIS _____ DAY OF _____, 20___ by and between the DOWNEY UNIFIED SCHOOL DISTRICT ("District") and _____ _____ ("Contractor"), whose place of business is _____ _____.

RECITALS

WHEREAS, District and Contractor entered into PROJECT/CONTRACT NO.: _____ _____ ("Contract" or "Project") in the County of Los Angeles , California; and

WHEREAS, the Work under the Contract was completed on _____, and a Notice of Completion was recorded with the County Recorder on _____.

NOW, THEREFORE, it is mutually agreed between District and Contractor as follows:

AGREEMENT AND RELEASE

35. Contractor will only be assessed liquidated damages as detailed below:

Original Contract Sum	$_____
Modified Contract Sum	$_____
Payment to Date	$_____
Liquidated Damages	$_____
Payment Due Contractor	$_____

36. Subject to the provisions hereof, District shall forthwith pay to Contractor the undisputed sum of _____ Dollars ($_____) under the Contract, less any amounts represented by any notice to withhold funds on file with District as of the date of such payment.

37. Contractor acknowledges and hereby agrees that there are no unresolved or outstanding claims in dispute against District arising from the performance of work under the Contract, except for the claims described in Paragraph 4 and continuing obligations described in Paragraph 6. It is the intention of the parties in executing this Agreement and Release that this Agreement and Release shall be effective as a full, final and general release of all claims, demands, actions, causes of action, obligations, costs, expenses, damages, losses and liabilities of Contractor against District and all of its respective agents, employees, trustees, inspectors, assignees, consultants and transferees, except for any Disputed Claim that may be set forth in Paragraph 4 and the continuing obligations described in Paragraph 6 hereof.

38. The following claims are disputed (hereinafter, the "Disputed Claims") and are specifically excluded from the operation of this Agreement and Release:

Claim No.	Description of Claim	Amount of Claim	Date Claim Submitted
_____	_____	$_____	_____
_____	_____	$_____	_____
_____	_____	$_____	_____
_____	_____	$_____	_____
_____	_____	$_____	_____
_____	_____	$_____	_____

[If further space is required, attach additional sheets showing the required information.]

39. Consistent with California Public Contract Code section 7100, Contractor hereby agrees that, in consideration of the payment set forth in Paragraph 2 hereof, Contractor hereby releases and forever discharges District, all its agents, employees, inspectors, assignees, and transferees from any and all liability, claims, demands, actions, or causes of action of whatever kind or nature arising out of or in any way concerned with the Work under the Contract.

40. Guarantees and warranties for the Work, and any other continuing obligation of Contractor, including without limitation, the duty to defend, indemnify and hold harmless the District, shall remain in full force and effect as specified in the Contract Documents.

41. Contractor hereby waives the provisions of California Civil Code section 1542 which provides as follows:

> A GENERAL RELEASE DOES NOT EXTEND TO CLAIMS THAT THE CREDITOR OR RELEASING PARTY DOES NOT KNOW OR SUSPECT TO EXIST IN HIS OR HER FAVOR AT THE TIME OF EXECUTING THE RELEASE AND THAT, IF KNOWN BY HIM OR HER, WOULD HAVE MATERIALLY AFFECTED HIS OR HER SETTLEMENT WITH THE DEBTOR OR RELEASED PARTY.

42. The provisions of this Agreement and Release are contractual in nature and not mere recitals and shall be considered independent and severable. If any such provision or any part thereof shall be at any time held invalid in whole or in part under any federal, state, county, municipal, or other law, ruling, or regulations, then such provision, or part thereof, shall remain in force and effect to the extent permitted by law, and the remaining provisions of this Agreement and Release shall also remain in full force and effect, and shall be enforceable.

43. All rights of District shall survive completion of the Work or termination of Contract, and execution of this Release.

* * * CAUTION: THIS IS A RELEASE - READ BEFORE EXECUTING * * *

DOWNEY UNIFIED SCHOOL DISTRICT

Signature: _____

Print Name: _____

Title: _____

CONTRACTOR: _____

Signature: _____

Print Name: _____

Title: _____

END OF DOCUMENT

DOCUMENT 00 65 36

GUARANTEE FORM

_____ ("Contractor") hereby agrees that the _____ _____ ("Work" of Contractor) which Contractor has installed for the Downey Unified School District ("District") for the following project:

PROJECT: Griffith Middle School Asphalt Paving Project

("Project" or "Contract") has been performed in accordance with the requirements of the Contract Documents and that the Work as installed will fulfill the requirements of the Contract Documents.

The undersigned agrees to repair or replace any or all of such Work that may prove to be defective in workmanship or material together with any other adjacent Work that may be displaced in connection with such replacement within a period of one year(s) from the date of completion as defined in Public Contract Code section 7107, subdivision (c), ordinary wear and tear and unusual abuse or neglect excepted. The date of completion is _____, 20___.

In the event of the undersigned's failure to comply with the above-mentioned conditions within a reasonable period of time, as determined by the District, but not later than seven (7) days after being notified in writing by the District, the undersigned authorizes the District to proceed to have said defects repaired and made good at the expense of the undersigned. The undersigned shall pay the costs and charges therefor upon demand.

Date: _____

Proper Name of Contractor: _____

Signature: _____

Print Name: _____

Title: _____

Representatives to be contacted for service subject to terms of Contract:

Name: _____

Address: _____

Phone No.: _____

Email: _____

END OF DOCUMENT

DOCUMENT 00 72 13

TABLE OF CONTENTS

		Page
1.	CONTRACT TERMS AND DEFINITIONS	1
1.1	Definitions	1
1.2	Laws Concerning the Contract	6
1.3	No Oral Agreements	6
1.4	No Assignment	6
1.5	Notice and Service Thereof	7
1.6	No Waiver	7
1.7	Substitutions for Specified Items	7
1.8	Materials and Work	7
2.	[RESERVED]	9
3.	ARCHITECT	9
4.	CONSTRUCTION MANAGER	10
5.	INSPECTOR, INSPECTIONS, AND TESTS	10
5.1	Project Inspector	10
5.2	Tests and Inspections	11
5.3	Costs for After Hours and/or Off Site Inspections	11
6.	CONTRACTOR	11
6.1	Status of Contractor	12
6.2	Project Inspection Card(s)	12
6.3	Contractor's Supervision	12
6.4	Duty to Provide Fit Workers	13
6.5	Field Office	13
6.6	Purchase of Materials and Equipment	13
6.7	Documents on Work	13
6.8	Preservation of Records	14
6.9	Integration of Work	15
6.10	Notifications	15
6.11	Obtaining of Permits, Licenses and Registrations	16
6.12	Royalties and Patents	16

6.13 Work to Comply With Applicable Laws and Regulations 16
6.14 Safety/Protection of Persons and Property 17
6.15 Working Evenings and Weekends 20
6.16 Cleaning Up 20
7. SUBCONTRACTORS 21
8. OTHER CONTRACTS/CONTRACTORS 22
9. DRAWINGS AND SPECIFICATIONS 23
10. CONTRACTOR'S SUBMITTALS AND SCHEDULES 24
10.1 Schedule of Work, Schedule of Submittals, and Schedule of Values 24
10.2 Monthly Progress Schedule(s) 27
10.3 Material Safety Data Sheets (MSDS) 27
11. SITE ACCESS, CONDITIONS, AND REQUIREMENTS 28
11.1 Site Investigation 28
11.2 Soils Investigation Report 28
11.3 Access to Work 28
11.4 Layout and Field Engineering 28
11.5 Utilities 29
11.6 Sanitary Facilities 29
11.7 Surveys 29
11.8 Regional Notification Center 29
11.9 Existing Utility Lines 29
11.10 Notification 30
11.11 Hazardous Materials 30
11.12 No Signs 30
12. TRENCHES 31
12.1 Trenches Greater Than Five Feet 31
12.2 Excavation Safety 31
12.3 No Tort Liability of District 31
12.4 No Excavation without Permits 31
12.5 Discovery of Hazardous Waste and/or Unusual Conditions 31
13. INSURANCE AND BONDS 32
13.1 Insurance 32
13.2 Contract Security - Bonds 36

14. WARRANTY/GUARANTEE/INDEMNITY 36
14.1 Warranty/Guarantee 36
14.2 Indemnity and Defense 37
15. TIME 39
15.1 Notice to Proceed 39
15.2 Computation of Time / Adverse Weather 39
15.3 Hours of Work 40
15.4 Progress and Completion 41
15.5 Schedule 41
15.6 Expeditious Completion 41
16. EXTENSIONS OF TIME – LIQUIDATED DAMAGES 41
16.1 Liquidated Damages 41
16.2 Excusable Delay 41
16.3 No Additional Compensation for Delays Within Contractor's Control 42
16.4 Float or Slack in the Schedule 43
17. CHANGES IN THE WORK 43
17.1 No Changes Without Authorization 43
17.2 Architect Authority 44
17.3 Change Orders 44
17.4 Construction Change Directives 44
17.5 Force Account Directives 44
17.6 Price Request 46
17.7 Proposed Change Order 46
17.8 Format for Proposed Change Order 48
17.9 Change Order Certification 50
17.10 Determination of Change Order Cost 50
17.11 Deductive Change Orders 50
17.12 Addition or Deletion of Alternate Bid Item(s) 51
17.13 Discounts, Rebates, and Refunds 51
17.14 Accounting Records 51
17.15 Notice Required 51
17.16 Applicability to Subcontractors 52
17.17 Alteration to Change Order Language 52

17.18 Failure of Contractor to Execute Change Order 52
18. REQUEST FOR INFORMATION 52
19. PAYMENTS 52
19.1 Contract Price 52
19.2 Applications for Progress Payments 52
19.3 Progress Payments 55
19.4 Decisions to Withhold Payment 57
19.5 Subcontractor Payments 59
20. COMPLETION OF THE WORK 60
20.1 Completion 60
20.2 Close-Out/Certification Procedures 60
20.3 Final Inspection 61
20.4 Costs of Multiple Inspections 62
20.5 Partial Occupancy or Use Prior to Completion 62
21. FINAL PAYMENT AND RETENTION 63
21.1 Final Payment 63
21.2 Prerequisites for Final Payment 63
21.3 Retention 64
21.4 Substitution of Securities 64
22. UNCOVERING OF WORK 64
23. NONCONFORMING WORK AND CORRECTION OF WORK 65
23.1 Nonconforming Work 65
23.2 Correction of Work 65
23.3 District's Right to Perform Work 65
24. TERMINATION AND SUSPENSION 66
24.1 District's Right to Terminate Contractor for Cause 66
24.2 Termination of Contractor for Convenience 69
24.3 Suspension of Work 70
25. CLAIMS PROCESS 70
25.1 Performance during Claim Process 70
25.2 Definition of Claim 70
25.3 Claims Presentation 71
25.4 Claim Resolution pursuant to Public Contract Code section 9204 72

25.5 Subcontractor Pass-Through Claims 73
25.6 Government Code Claim Act Claim 74
25.7 Claim Resolution pursuant to Public Contract Code section 20104 et seq. 74
25.8 Claim Resolution Non-Applicability 76
25.9 Attorney's Fees 76
26. STATE LABOR, WAGE & HOUR, APPRENTICE, AND RELATED PROVISIONS 76
26.1 Labor Compliance and Enforcement 76
26.2 Wage Rates, Travel, and Subsistence 76
26.3 Hours of Work 77
26.4 Payroll Records 78
26.5 [RESERVED] 79
26.6 Apprentices 79
26.7 Non-Discrimination 80
26.8 Labor First Aid 81
27. [RESERVED] 81
28. MISCELLANEOUS 81
28.1 Assignment of Antitrust Actions 81
28.2 Excise Taxes 82
28.3 Taxes 82
28.4 Shipments 82
28.5 Compliance with Government Reporting Requirements 82

DOCUMENT 00 72 13

GENERAL CONDITIONS

1. CONTRACT TERMS AND DEFINITIONS

1.1 Definitions

Wherever used in the Contract Documents, the following terms shall have the meanings indicated, which shall be applicable to both the singular and plural thereof:

1.1.1 Adverse Weather: Shall be only weather that satisfies all of the following conditions: (1) unusually severe precipitation, sleet, snow, hail, or extreme temperature conditions in excess of the norm for the location and time of year it occurred based on the closest weather station data averaged over the past five years, (2) that is unanticipated and would cause unsafe work conditions and/or is unsuitable for scheduled work that should not be performed during inclement weather (i.e., exterior finishes), and (3) at the Project.

1.1.2 Allowance Expenditure Directive: Written authorization for expenditure of allowance, if any.

1.1.3 Approval, Approved, and/or Accepted: Written authorization, unless stated otherwise.

1.1.4 Architect (or "Design Professional in General Responsible Charge"): The individual, partnership, corporation, joint venture, or any combination thereof, named as Architect, who will have the rights and authority assigned to the Architect in the Contract Documents. The term Architect means the Design Professional in General Responsible Charge as defined in DSA PR 13-02 on this Project or the Architect's authorized representative.

1.1.5 As-Builts: Reproducible blue line prints of drawings to be prepared on a monthly basis pursuant to the Contract Documents, that reflect changes made during the performance of the Work, recording differences between the original design of the Work and the Work as constructed since the preceding monthly submittal. See **Record Drawings**.

1.1.6 Bidder: A contractor who intends to provide a proposal to the District to perform the Work of this Contract.

1.1.7 Change Order: A written order to the Contractor authorizing an addition to, deletion from, or revision in the Work, and/or authorizing an adjustment in the Contract Price or Contract Time.

1.1.8 Claim: A Dispute that remains unresolved at the conclusion of the all the applicable Dispute Resolution requirements provided herein.

1.1.9 Construction Change Directive: A written order prepared and issued by the District, the Construction Manager, and/or the Architect and signed by the District and the Architect, directing a change in the Work.

1.1.10 Construction Manager: The individual, partnership, corporation, joint venture, or any combination thereof, or its authorized representative, named as such by the District. If no Construction Manager is used on the Project that is the subject of this Contract, then all references to Construction Manager herein shall be read to refer to District.

1.1.11 Construction Schedule: The progress schedule of construction of the Project as provided by Contractor and approved by District.

1.1.12 Contract, Contract Documents: The Contract consists exclusively of the documents evidencing the agreement of the District and Contractor, identified as the Contract Documents. The Contract Documents consist of the following documents:

1.1.12.1 Notice to Bidders
1.1.12.2 Instructions to Bidders
1.1.12.3 Bid Form and Proposal
1.1.12.4 Bid Bond
1.1.12.5 Designated Subcontractors List
1.1.12.6 Site Visit Certification (if a site visit was required)
1.1.12.7 Non-Collusion Declaration
1.1.12.8 Notice of Award
1.1.12.9 Notice to Proceed
1.1.12.10 Agreement
1.1.12.11 Escrow of Bid Documentation
1.1.12.12 Escrow Agreement for Security Deposits in Lieu of Retention (if applicable)
1.1.12.13 Performance Bond
1.1.12.14 Payment Bond (Contractor's Labor & Material Bond)
1.1.12.15 General Conditions
1.1.12.16 Special Conditions (if applicable)
1.1.12.17 Project Labor Agreement (if applicable)
1.1.12.18 Hazardous Materials Procedures and Requirements
1.1.12.19 Workers' Compensation Certification
1.1.12.20 Prevailing Wage Certification
1.1.12.21 Disabled Veteran Business Enterprise Participation Certification (if applicable)
1.1.12.22 Drug-Free Workplace Certification (if applicable)
1.1.12.23 Tobacco-Free Environment Certification
1.1.12.24 Hazardous Materials Certification (if applicable)
1.1.12.25 Lead-Based Materials Certification (if applicable)
1.1.12.26 Imported Materials Certification (if applicable)
1.1.12.27 Criminal Background Investigation/Fingerprinting Certification
1.1.12.28 Buy American Certification (if applicable)
1.1.12.29 Roofing Project Certification (if applicable)
1.1.12.30 Registered Subcontractors List
1.1.12.31 Iran Contracting Act Certification (if applicable)
1.1.12.32 Post Bid Interview
1.1.12.33 All Plans, Technical Specifications, and Drawings
1.1.12.34 Any and all addenda to any of the above documents
1.1.12.35 Any and all change orders or written modifications to the above documents if approved in writing by the District

1.1.13 Contract Price: The total monies payable to the Contractor under the terms and conditions of the Contract Documents.

1.1.14 Contract Time: The time period stated in the Agreement for the completion of the Work.

1.1.15 Contractor: The person or persons identified in the Agreement as contracting to perform the Work to be done under this Contract, or the legal representative of such a person or persons.

1.1.16 Daily Job Report(s): Daily Project reports prepared by the Contractor's employee(s) who are present on Site, which shall include the information required herein.

1.1.17 Day(s): Unless otherwise designated, day(s) means calendar day(s).

1.1.18 Department of Industrial Relations (or "DIR"): is responsible, among other things, for labor compliance monitoring and enforcement of California prevailing wage laws and regulations for public works contracts.

1.1.19 Design Professional in General Responsible Charge: See definition of **Architect** above.

1.1.20 Dispute: A separate demand by Contractor for a time extension, or payment of money or damages arising from Work done by or on behalf of the Contractor pursuant to the Contract and payment of which is not otherwise expressly provided for or Contractor is not otherwise entitled to; or an amount of payment disputed by the District.

1.1.21 District: The public agency or the school district for which the Work is performed. The governing board of the District or its designees will act for the District in all matters pertaining to the Contract. The District may, at any time,

1.1.21.1 Direct the Contractor to communicate with or provide notice to the Construction Manager or the Architect on matters for which the Contract Documents indicate the Contractor will communicate with or provide notice to the District; and/or

1.1.21.2 Direct the Construction Manager or the Architect to communicate with or direct the Contractor on matters for which the Contract Documents indicate the District will communicate with or direct the Contractor.

1.1.22 Drawings (or "Plans"): The graphic and pictorial portions of the Contract Documents showing the design, location, scope and dimensions of the work, generally including plans, elevations, sections, details, schedules, sequence of operation, and diagrams.

1.1.23 DSA: Division of the State Architect.

1.1.24 Force Account Directive: A process that may be used when the District and the Contractor cannot agree on a price for a specific portion of work or before the Contractor prepares a price for a specific portion of work and whereby the Contractor performs the work as indicated herein on a time and materials basis.

1.1.25 Job Cost Reports: Any and all reports or records detailing the costs associated with work performed on or related to the Project that Contractor shall maintain for the Project. Specifically, Job Cost Reports shall contain, but are not limited by or to, the following information: a description of the work performed or to be performed on the Project; quantity, if applicable, of work performed (hours, square feet, cubic yards, pounds, etc.) for the Project; Project budget; costs for the Project to date; estimated costs to complete the Project; and expected costs at completion. The Job Cost Reports shall also reflect all Contract cost codes, change orders, elements of non-conforming work, back charges, and additional services.

1.1.26 Labor Commissioner's Office (or "Labor Commissioner", also known as the Division of Labor Standards Enforcement ("DLSE")): Division of the DIR responsible for adjudicating wage claims, investigating discrimination and public works complaints, and enforcing Labor Code statutes and Industrial Welfare Commission orders.

1.1.27 Municipal Separate Storm Sewer System (or "MS4"): A system of conveyances used to collect and/or convey storm water, including, without limitation, catch basins, curbs, gutters, ditches, man-made channels, and storm drains.

1.1.28 Plans: See **Drawings**.

1.1.29 Premises: The real property owned by the District on which the Site is located.

1.1.30 Product(s): New material, machinery, components, equipment, fixtures and systems forming the Work, including existing materials or components required and approved by the District for reuse.

1.1.31 Product Data: Illustrations, standard schedules, performance charts, instructions, brochures, diagrams, and other information furnished by the Contractor to illustrate a material, product, or system for some portion of the Work.

1.1.32 Program Manager: The individual, partnership, corporation, joint venture, or any combination thereof, or its authorized representative, named as such by the District. If no Program Manager is designated for Project that is the subject of this Contract, then all references to Project Manager herein shall be read to refer to District.

1.1.33 Project: The planned undertaking as provided for in the Contract Documents.

1.1.34 Project Inspector (or "Inspector"): The individual(s) retained by the District in accordance with title 24 of the California Code of Regulations to monitor and inspect the Project.

1.1.35 Project Labor Agreement (or "PLA"): a prehire collective bargaining agreement in accordance with Public Contract Code section 2500 et seq. that establishes terms and conditions of employment for a specific construction project or projects and/or is an agreement described in Section 158(f) of Title 29 of the United States Code.

1.1.36 Proposed Change Order (or "PCO"): a written request prepared by the Contractor requesting that the District and the Architect issue a Change Order based upon a proposed change to the Work.

1.1.37 Provide: Shall include "provide complete in place," that is, "furnish and install," and "provide complete and functioning as intended in place" unless specifically stated otherwise.

1.1.38 Qualified SWPPP Practitioners (or "QSP"): certified personnel that attended a State Water Resources Control Board sponsored or approved training class and passed the qualifying exam.

1.1.39 Record Drawings: Reproducible drawings (or Plans) prepared pursuant to the requirements of the Contract Documents that reflect all changes made during the performance of the Work, recording differences between the original design of the Work and the Work as constructed upon completion of the Project. See also **As-Builts**.

1.1.40 Request for Information (or "RFI"): A written request prepared by the Contractor requesting that the Architect provide additional information necessary to clarify or amplify an item in the Contract Documents that the Contractor believes is not clearly shown or called for in the Drawings or Specifications or other portions of the Contract Documents, or to address problems that have arisen under field conditions.

1.1.41 Request for Substitution for Specified Item: A request by Contractor to substitute an equal or superior material, product, thing, or service for a specific material, product, thing, or service that has been designated in the Contract Documents by a specific brand or trade name.

1.1.42 Safety Orders: Written and/or verbal orders for construction issued by the California Division of Occupational Safety and Health ("CalOSHA") or by the United States Occupational Safety and Health Administration ("OSHA").

1.1.43 Safety Plan: Contractor's safety plan specifically adapted for the Project. Contractor's Safety Plan shall comply with all provisions regarding Project safety, including all applicable provisions in these General Conditions.

1.1.44 Samples: Physical examples that illustrate materials, products, equipment, finishes, colors, or workmanship and that, when approved in accordance with the Contract Documents, establish standards by which portions of the Work will be judged.

1.1.45 Shop Drawings: All drawings, prints, diagrams, illustrations, brochures, schedules, and other data that are prepared by the Contractor, a subcontractor, manufacturer, supplier, or distributor, that illustrate how specific portions of the Work shall be fabricated or installed.

1.1.46 Site: The Project site as shown on the Drawings.

1.1.47 Specifications: That portion of the Contract Documents, Division 1 through Division 49, and all technical sections, and addenda to all of these, if any,

consisting of written descriptions and requirements of a technical nature of materials, equipment, construction methods and systems, standards, and workmanship.

1.1.48 State: The State of California.

1.1.49 Storm Water Pollution Prevention Plan (or "SWPPP"): A document which identifies sources and activities at a particular facility that may contribute pollutants to storm water and contains specific control measures and time frames to prevent or treat such pollutants.

1.1.50 Subcontractor: A contractor and/or supplier who is under contract with the Contractor or with any other subcontractor, regardless of tier, to perform a portion of the Work of the Project.

1.1.51 Submittal Schedule: The schedule of submittals as provided by Contractor and approved by District.

1.1.52 Surety: The person, firm, or corporation that executes as surety the Contractor's Performance Bond and Payment Bond, and must be a California admitted surety insurer as defined in the Code of Civil Procedure section 995.120.

1.1.53 Work: All labor, materials, equipment, components, appliances, supervision, coordination, and services required by, or reasonably inferred from, the Contract Documents, that are necessary for the construction and completion of the Project.

1.2 Laws Concerning the Contract

Contract is subject to all provisions of the Constitution and laws of California and the United States governing, controlling, or affecting District, or the property, funds, operations, or powers of District, and such provisions are by this reference made a part hereof. Any provision required by law to be included in this Contract shall be deemed to be inserted.

1.3 No Oral Agreements

No oral agreement or conversation with any officer, agent, or employee of District, either before or after execution of Contract, shall affect or modify any of the terms or obligations contained in any of the documents comprising the Contract.

1.4 No Assignment

Contractor shall not assign this Contract or any part thereof including, without limitation, any services or money to become due hereunder without the prior written consent of the District. Assignment without District's prior written consent shall be null and void. Any assignment of money due or to become due under this Contract shall be subject to a prior lien for services rendered or material supplied for performance of work called for under this Contract in favor of all persons, firms, or corporations rendering services or supplying material to the extent that claims are filed pursuant to the Civil Code, Code of Civil Procedure, Government Code, Labor Code, and/or Public Contract Code, and shall also be subject to deductions for liquidated damages or withholding of payments as determined by District in accordance with this Contract. Contractor shall not assign or

transfer in any manner to a Subcontractor or supplier the right to prosecute or maintain an action against the District.

1.5 Notice and Service Thereof

1.5.1 Any notice from one party to the other or otherwise under Contract shall be in writing and shall be dated and signed by the party giving notice or by a duly authorized representative of that party. Any notice shall not be effective for any purpose whatsoever unless served in one of the following manners:

1.5.1.1 If notice is given by personal delivery thereof, it shall be considered delivered on the day of delivery.

1.5.1.2 If notice is given by overnight delivery service, it shall be considered delivered one (1) day after date deposited, as indicated by the delivery service.

1.5.1.3 If notice is given by depositing same in United States mail, enclosed in a sealed envelope, it shall be considered delivered three (3) days after date deposited, as indicated by the postmarked date.

1.5.1.4 If notice is given by registered or certified mail with postage prepaid, return receipt requested, it shall be considered delivered on the day the notice is signed for.

1.5.1.5 Electronic mail may be used for convenience but is not a substitute for the notice and service requirements herein.

1.6 No Waiver

The failure of District in any one or more instances to insist upon strict performance of any of the terms of this Contract or to exercise any option herein conferred shall not be construed as a waiver or relinquishment to any extent of the right to assert or rely upon any such terms or option on any future occasion. No action or failure to act by the District, Architect, or Construction Manager shall constitute a waiver of any right or duty afforded the District under the Contract, nor shall any action or failure to act constitute an approval of or acquiescence in any breach thereunder, except as may be specifically agreed in writing.

1.7 Substitutions for Specified Items

Unless the Special Conditions contain different provisions, Contractor shall not substitute different items for any items identified in the Contract Documents without prior written approval of the District.

1.8 Materials and Work

1.8.1 Except as otherwise specifically stated in this Contract, Contractor shall provide and pay for all materials, labor, tools, equipment, transportation, supervision, temporary constructions of every nature, and all other services, management, and facilities of every nature whatsoever necessary to execute and complete this Contract, in a good and workmanlike manner, within the Contract Time.

1.8.2 Unless otherwise specified, all materials shall be new and of the best quality of their respective kinds and grades as noted or specified, workmanship shall be of good quality, and Contractor shall use all diligence to inform itself fully as to the required manufacturer's instructions and to comply therewith.

1.8.3 Materials shall be furnished in ample quantities and at such times as to insure uninterrupted progress of Work and shall be stored properly and protected from the elements, theft, vandalism, or other loss or damage as required.

1.8.4 For all materials and equipment specified or indicated in the Drawings, the Contractor shall provide all labor, materials, equipment, and services necessary for complete assemblies and complete working systems, functioning as intended. Incidental items not indicated on Drawings, nor mentioned in the Specifications, that can legitimately and reasonably be inferred to belong to the Work described, or be necessary in good practice to provide a complete assembly or system, shall be furnished as though itemized here in every detail. In all instances, material and equipment shall be installed in strict accordance with each manufacturer's most recent published recommendations and specifications.

1.8.5 Contractor shall, after award of Contract by District and after relevant submittals have been approved, place orders for materials and/or equipment as specified so that delivery of same may be made without delays to the Work. Contractor shall, upon demand from District, present documentary evidence showing that orders have been placed.

1.8.6 District reserves the right but has no obligation, in response to Contractor's neglect or failure in complying with the above instructions, to place orders for such materials and/or equipment as the District may deem advisable in order that the Work may be completed at the date specified in the Agreement, and all expenses incidental to the procuring of said materials and/or equipment shall be paid for by Contractor or deducted from payment(s) to Contractor.

1.8.7 Contractor warrants good title to all material, supplies, and equipment installed or incorporated in Work and agrees upon completion of all Work to deliver the Site to District, together with all improvements and appurtenances constructed or placed thereon by it, and free from any claims, liens, or charges. Contractor further agrees that neither it nor any person, firm, or corporation furnishing any materials or labor for any work covered by the Contract shall have any right to lien any portion of the Premises or any improvement or appurtenance thereon, except that Contractor may install metering devices or other equipment of utility companies or of political subdivision, title to which is commonly retained by utility company or political subdivision. In the event of installation of any such metering device or equipment, Contractor shall advise District as to owner thereof.

1.8.7.1 If a lien or a claim based on a stop payment notice of any nature should at any time be filed against the Work or any District property, by any entity that has supplied material or services at the request of the Contractor, Contractor and Contractor's Surety shall promptly, on demand by District and at Contractor's and Surety's own expense, take any and all action necessary to cause any such lien or a claim based on a stop payment notice to be released or discharged immediately therefrom.

1.8.7.2 If the Contractor fails to furnish to the District within ten (10) calendar days after demand by the District, satisfactory evidence that a lien or a claim based on a stop payment notice has been so released, discharged, or secured, the District may discharge such indebtedness and deduct the amount required therefor, together with any and all losses, costs, damages, and attorney's fees and expense incurred or suffered by District from any sum payable to Contractor under the Contract.

1.8.8 Nothing contained in this Article, however, shall defeat or impair the rights of persons furnishing materials or labor under any bond given by Contractor for their protection or any rights under any law permitting such protection or any rights under any law permitting such persons to look to funds due Contractor in hands of District (e.g., stop payment notices), and this provision shall be inserted in all subcontracts and material contracts and notice of its provisions shall be given to all persons furnishing material for work when no formal contract is entered into for such material.

1.8.9 Title to new materials and/or equipment for the Work of this Contract and attendant liability for its protection and safety shall remain with Contractor until incorporated in the Work of this Contract and accepted by District. No part of any materials and/or equipment shall be removed from its place of storage except for immediate installation in the Work of this Contract. Should the District, in its discretion, allow the Contractor to store materials and/or equipment for the Work off-site, Contractor will store said materials and/or equipment at a bonded warehouse and with appropriate insurance coverage at no cost to District. Contractor shall keep an accurate inventory of all materials and/or equipment in a manner satisfactory to District or its authorized representative and shall, at the District's request, forward it to the District.

2. [RESERVED]

3. ARCHITECT

3.1 The Architect shall represent the District during the Project and will observe the progress and quality of the Work on behalf of the District. Architect shall have the authority to act on behalf of District to the extent expressly provided in the Contract Documents and to the extent determined by District. Architect shall have authority to reject materials, workmanship, and/or the Work whenever rejection may be necessary, in Architect's reasonable opinion, to insure the proper execution of the Contract.

3.2 Architect shall, with the District and on behalf of the District, determine the amount, quality, acceptability, and fitness of all parts of the Work, and interpret the Specifications, Drawings, and shall, with the District, interpret all other Contract Documents.

3.3 Architect shall have all authority and responsibility established by law, including title 24 of the California Code of Regulations.

3.4 Contractor shall provide District and the Construction Manager with a copy of all written communication between Contractor and Architect at the same time as that communication is made to Architect, including, without limitation, all RFIs, correspondence, submittals, claims, and proposed change orders.

4. CONSTRUCTION MANAGER

4.1 If a Construction Manager is used on this Project ("Construction Manager" or "CM"), the Construction Manager will provide administration of the Contract on the District's behalf. After execution of the Contract and Notice to Proceed, all correspondence and/or instructions from Contractor and/or District shall be forwarded through the Construction Manager. The Construction Manager will not be responsible for and will not have control or charge of construction means, methods, techniques, sequences, or procedures or for safety precautions in connection with the Work, which shall all remain the Contractor's responsibility.

4.2 The Construction Manager, however, will have authority to reject materials and/or workmanship not conforming to the Contract Documents, as determined by the District, the Architect, and/or the Project Inspector. The Construction Manager shall also have the authority to require special inspection or testing of any portion of the Work, whether it has been fabricated, installed, or fully completed. Any decision made by the Construction Manager, in good faith, shall not give rise to any duty or responsibility of the Construction Manager to: the Contractor; any Subcontractor; the Contractor or Subcontractor's respective agents, employees; or other persons performing any of the Work. The Construction Manager shall have free access to any or all parts of Work at any time.

4.3 If the District does not use a Construction Manager on this Project, all references to Construction Manager or CM shall be read as District.

5. INSPECTOR, INSPECTIONS, AND TESTS

5.1 Project Inspector

5.1.1 One or more Project Inspector(s), including special Project Inspector(s), as required, will be assigned to the Work by District, in accordance with requirements of title 24, part 1, of the California Code of Regulations, to enforce the building code and monitor compliance with Plans and Specifications for the Project previously approved by the DSA. Duties of Project Inspector(s) are specifically defined in section 4-342 of said part 1 of title 24.

5.1.2 No Work shall be carried on except with the knowledge and under the inspection of the Project Inspector(s). The Project Inspector(s) shall have free access to any or all parts of Work at any time. Contractor shall furnish Project Inspector(s) reasonable opportunities for obtaining such information as may be necessary to keep Project Inspector(s) fully informed respecting progress and manner of work and character of materials, including, but not limited to, submission of form DSA 156 (or the most current version applicable at the time the Work is performed) to the Project Inspector at least 48 hours in advance of the commencement and completion of construction of each and every aspect of the Work. Forms are available on the DSA's website at: http://www.dgs.ca.gov/dsa/Forms.aspx. Inspection of Work shall not relieve Contractor from an obligation to fulfill this Contract. Project Inspector(s) and the DSA are authorized to suspend work whenever the Contractor and/or its Subcontractor(s) are not complying with the Contract Documents. Any work stoppage by the Project Inspector(s) and/or DSA shall be without liability to the District. Contractor shall instruct its Subcontractors and employees accordingly.

5.1.3 If Contractor and/or any Subcontractor requests that the Project Inspector(s) perform any inspection off-site, this shall only be done if it is allowable pursuant to applicable regulations and DSA approval, if the Project Inspector(s) agree to do so, and at the expense of the Contractor.

5.2 Tests and Inspections

5.2.1 Tests and Inspections shall comply with title 24, part 1, California Code of Regulations, group 1, article 5, section 4-335, and with the provisions of the Specifications.

5.2.2 The District will select an independent testing laboratory to conduct the tests. Selection of the materials required to be tested shall be by the laboratory or the District's representative and not by the Contractor. The Contractor shall notify the District's representative a sufficient time in advance of its readiness for required observation or inspection.

5.2.3 The Contractor shall notify the District's representative a sufficient time in advance of the manufacture of material to be supplied under the Contract Documents, which must by terms of the Contract Documents be tested, in order that the District may arrange for the testing of same at the source of supply. This notice shall be provided, at a minimum, seventy-two (72) hours prior to the manufacture of the material that needs to be tested.

5.2.4 Any material shipped by the Contractor from the source of supply prior to having satisfactorily passed such testing and inspection or prior to the receipt of notice from said representative that such testing and inspection will not be required, shall not be incorporated into and/or onto the Project.

5.2.5 The District will select the testing laboratory and pay for the cost of all tests and inspections. Contractor shall reimburse the District for any and all laboratory costs or other testing costs for any materials found to be not in compliance with the Contract Documents. At the District's discretion, District may elect to deduct laboratory or other testing costs for noncompliant materials from the Contract Price, and such deduction shall not constitute a withholding.

5.3 Costs for After Hours and/or Off Site Inspections

If the Contractor performs Work outside the Inspector's regular working hours or requests the Inspector to perform inspections off Site, costs of any inspections required outside regular working hours or off Site shall be borne by the Contractor and may be invoiced to the Contractor by the District or the District may deduct those expenses from the next Progress Payment.

6. CONTRACTOR

Contractor shall construct and complete, in a good and workmanlike manner, the Work for the Contract Price including any adjustment(s) to the Contract Price pursuant to provisions herein regarding changes to the Contract Price. Except as otherwise noted, Contractor shall provide and pay for all labor, materials, equipment, permits (excluding DSA), fees, licenses, facilities, transportation, taxes, bonds and insurance, and services necessary for the proper execution and completion of the Work, except as indicated herein.

6.1 Status of Contractor

6.1.1 Contractor is and shall at all times be deemed to be an independent contractor and shall be wholly responsible for the manner in which it and its Subcontractors perform the services required of it by the Contract Documents. Nothing herein contained shall be construed as creating the relationship of employer and employee, or principal and agent, between the District, or any of the District's employees or agents, and Contractor or any of Contractor's Subcontractors, agents or employees. Contractor assumes exclusively the responsibility for the acts of its agents, and employees as they relate to the services to be provided during the course and scope of their employment. Contractor, its Subcontractors, agents, and its employees shall not be entitled to any rights or privileges of District employees. District shall be permitted to monitor the Contractor's activities to determine compliance with the terms of this Contract.

6.1.2 As required by law, Contractor and all Subcontractors shall be properly licensed and regulated by the Contractors State License Board, 9821 Business Park Drive, Sacramento, California 95827, http://www.cslb.ca.gov.

6.1.3 As required by law, Contractor and all Subcontractors shall be properly registered as public works contractors by the Department of Industrial Relations at: https://efiling.dir.ca.gov/PWCR/ActionServlet?action=displayPWCRegistrationForm or current URL.

6.1.4 Contractor represents that it has no existing interest and will not acquire any interest, direct or indirect, which could conflict in any manner or degree with the performance of Work required under this Contract and that no person having any such interest shall be employed by Contractor.

6.2 Project Inspection Card(s)

Contractor shall verify that forms DSA 152 (or the current version applicable at the time the Work is performed) are issued for the Project prior to the commencement of construction.

6.3 Contractor's Supervision

6.3.1 During progress of the Work, Contractor shall keep on the Premises, and at all other locations where any Work related to the Contract is being performed, an experienced and competent project manager and construction superintendent who are employees of the Contractor, to whom the District does not object and at least one of whom shall be fluent in English, written and verbal.

6.3.2 The project manager and construction superintendent shall both speak fluently the predominant language of the Contractor's employees.

6.3.3 Before commencing the Work herein, Contractor shall give written notice to District of the name of its project manager and construction superintendent. Neither the Contractor's project manager nor construction superintendent shall be changed except with prior written notice to District. If the Contractor's project manager and/or construction superintendent proves to be unsatisfactory to Contractor, or to District, any of the District's employees, agents, the Construction Manager, or the Architect, Contractor shall notify District in writing before any

change occurs, but no less than two (2) business days prior. Any replacement of the project manager and/or construction superintendent shall be made promptly and must be satisfactory to the District. The Contractor's project manager and construction superintendent shall each represent Contractor, and all directions given to Contractor's project manager and/or construction superintendent shall be as binding as if given to Contractor.

6.3.4 Contractor shall give efficient supervision to Work, using its best skill and attention. Contractor shall carefully study and compare all Contract Documents, Drawings, Specifications, and other instructions and shall at once report to District, Construction Manager, and Architect any error, inconsistency, or omission that Contractor or its employees and Subcontractors may discover, in writing, with a copy to District's Project Inspector(s). The Contractor shall have responsibility for discovery of errors, inconsistencies, or omissions.

6.4 Duty to Provide Fit Workers

6.4.1 Contractor and Subcontractor(s) shall at all times enforce strict discipline and good order among their employees and shall not employ or work any unfit person or anyone not skilled in work assigned to that person. It shall be the responsibility of Contractor to ensure compliance with this requirement. District may require Contractor to permanently remove unfit persons from Project Site.

6.4.2 Any person in the employ of Contractor or Subcontractor(s) whom District may deem incompetent or unfit shall be excluded from working on the Project and shall not again be employed on the Project except with the prior written consent of District.

6.4.3 The Contractor shall furnish labor that can work in harmony with all other elements of labor employed or to be employed in the Work.

6.4.4 If Contractor intends to make any change in the name or legal nature of the Contractor's entity, Contractor must first notify the District in writing prior to making any contemplated change. The District shall determine in writing if Contractor's intended change is permissible while performing this Contract.

6.5 Field Office

6.5.1 Contractor shall provide a temporary office on the Work Site for the District's use exclusively, during the term of the Contract.

6.6 Purchase of Materials and Equipment

The Contractor is required to order, obtain, and store materials and equipment sufficiently in advance of its Work at no additional cost or advance payment from District to assure that there will be no delays.

6.7 Documents on Work

6.7.1 Contractor shall at all times keep on the Work Site, or at another location as the District may authorize in writing, one legible copy of all Contract Documents, including Addenda and Change Orders, and Titles 19 and 24 of the California Code of Regulations, the specified edition(s) of the Uniform Building Code, all approved

Drawings, Plans, Schedules, and Specifications, and all codes and documents referred to in the Specifications, and made part thereof. These documents shall be kept in good order and available to District, Construction Manager, Architect, Architect's representatives, the Project Inspector(s), and all authorities having jurisdiction. Contractor shall be acquainted with and comply with the provisions of these titles as they relate to this Project. (See particularly the duties of Contractor, Title 24, Part 1, California Code of Regulations, section 4-343.) Contractor shall also be acquainted with and comply with all California Code of Regulations provisions relating to conditions on this Project, particularly Titles 8 and 17. Contractor shall coordinate with Architect and Construction Manager and shall submit its verified report(s) according to the requirements of Title 24.

6.7.2 Daily Job Reports.

6.7.2.1 Contractor shall maintain, at a minimum, at least one (1) set of Daily Job Reports on the Project. These must be prepared by the Contractor's employee(s) who are present on Site, and must include, at a minimum, the following information:

6.7.2.1.1 A brief description of all Work performed on that day.
6.7.2.1.2 A summary of all other pertinent events and/or occurrences on that day.
6.7.2.1.3 The weather conditions on that day.
6.7.2.1.4 A list of all Subcontractor(s) working on that day, including DIR registration numbers.
6.7.2.1.5 A list of each Contractor employee working on that day and the total hours worked for each employee.
6.7.2.1.6 A complete list of all equipment on Site that day, whether in use or not.
6.7.2.1.7 A complete list of all materials, supplies, and equipment delivered on that day.
6.7.2.1.8 A complete list of all inspections and tests performed on that day.

6.7.2.2 Each day Contractor shall provide a copy of the previous day's Daily Job Report to the District or the Construction Manager.

6.8 Preservation of Records

Contractor shall maintain, and District shall have the right to inspect, Contractor's financial records for the Project, including, without limitation, Job Cost Reports for the Project in compliance with the criteria set forth herein. The District shall have the right to examine and audit all Daily Job Reports or other Project records of Contractor's project manager(s), project superintendent(s), and/or project foreperson(s), all certified payroll records and/or related documents including, without limitation, Job Cost Reports, payroll, payment, timekeeping and tracking documents; all books, estimates, records, contracts, documents, bid documents, bid cost data, subcontract job cost reports, and other data of the Contractor, any Subcontractor, and/or supplier, including computations and projections related to bidding, negotiating, pricing, or performing the Work or Contract modification, in order to evaluate the accuracy, completeness, and currency of the cost, manpower, coordination, supervision, or pricing data at no additional cost to the District. These documents may be duplicative and/or be in addition to any Bid Documents held in escrow by the District. The Contractor shall make available at its

office at all reasonable times the materials described in this paragraph for the examination, audit, or reproduction until three (3) years after final payment under this Contract. Notwithstanding the provisions above, Contractor shall provide any records requested by any governmental agency, if available, after the time set forth above.

6.9 Integration of Work

6.9.1 Contractor shall do all cutting, fitting, patching, and preparation of Work as required to make its several parts come together properly, to fit it to receive or be received by work of other contractors, and to coordinate tolerances to various pieces of work, showing upon, or reasonably implied by, the Drawings and Specifications for the completed structure, and shall conform them as District and/or Architect may direct.

6.9.2 Contractor shall make its own layout of lines and elevations and shall be responsible for the accuracy of both Contractor's and Subcontractors' work resulting therefrom.

6.9.3 Contractor and all Subcontractors shall take all field dimensions required in performance of the Work, and shall verify all dimensions and conditions on the Site. All dimensions affecting proper fabrication and installation of all Work must be verified prior to fabrication by taking field measurements of the true conditions. If there are any discrepancies between dimensions in drawings and existing conditions which will affect the Work, Contractor shall bring such discrepancies to the attention of the District and Architect for adjustment before proceeding with the Work. In doing so, it is recognized that Contractor is not acting in the capacity of a licensed design professional, and that Contractor's examination is made in good faith to facilitate construction and does not create an affirmative responsibility to detect errors, omissions or inconsistencies in the Contract Documents or to ascertain compliance with applicable laws, building codes or regulations. Following receipt of written notice from Contractor, the District and/or Architect shall inform Contractor what action, if any, Contractor shall take with regard to such discrepancies.

6.9.4 All costs caused by noncompliant, defective, or delayed Work shall be borne by Contractor, inclusive of repair work.

6.9.5 Contractor shall not endanger any work performed by it or anyone else by cutting, excavating, or otherwise altering work and shall not cut or alter work of any other contractor except with consent of District.

6.10 Notifications

6.10.1 Contractor shall notify the Architect and Project Inspector, in writing, of the commencement of construction of each and every aspect of the Work at least 48 hours in advance by submitting form DSA 156 (or the most current version applicable at the time the Work is performed) to the Project Inspector. Forms are available on the DSA's website at: http://www.dgs.ca.gov/dsa/Forms.aspx.

6.10.2 Contractor shall notify the Architect and Project Inspector, in writing, of the completion of construction of each and every aspect of the Work at least 48 hours in advance by submitting form DSA 156 (or current version) to the Project Inspector.

6.11 Obtaining of Permits, Licenses and Registrations

Contractor shall secure and pay for all permits (except DSA), licenses, registrations, approvals and certificates necessary for prosecution of Work, including but not limited to those listed in the Special Conditions, if any, before the date of the commencement of the Work or before the permits, licenses, registrations, approvals and certificates are legally required to continue the Work without interruption. The Contractor shall obtain and pay, only when legally required, for all licenses, registrations, approvals, permits, inspections, and inspection certificates required to be obtained from or issued by any authority having jurisdiction over any part of the Work included in the Contract. All final permits, licenses, registrations, approvals and certificates shall be delivered to District before demand is made for final payment.

6.12 Royalties and Patents

6.12.1 Contractor shall obtain and pay, only when legally required, all royalties and license fees necessary for prosecution of Work before the earlier of the date of the commencement of the Work or the date that the license is legally required to continue the Work without interruption. Contractor shall defend suits or claims of infringement of patent, copyright, or other rights and shall hold the District, the Architect, and the Construction Manager harmless and indemnify them from loss on account thereof except when a particular design, process, or make or model of product is required by the Contract Documents. However, if the Contractor has reason to believe that the required design, process, or product is an infringement of a patent or copyright, the Contractor shall indemnify and defend the District, Architect and Construction Manager against any loss or damage unless the Contractor promptly informs the District of its information.

6.12.2 The review by the District or Architect of any method of construction, invention, appliance, process, article, device, or material of any kind shall be only its adequacy for the Work and shall not approve use by the Contractor in violation of any patent or other rights of any person or entity.

6.13 Work to Comply With Applicable Laws and Regulations

6.13.1 Contractor shall give all notices and comply with the following specific laws, ordinances, rules, and regulations and all other applicable laws, ordinances, rules, and regulations bearing on conduct of Work as indicated and specified, including but not limited to the appropriate statutes and administrative code sections. If Contractor observes that Drawings and Specifications are at variance therewith, or should Contractor become aware of the development of conditions not covered by Contract Documents that may result in finished Work being at variance therewith, Contractor shall promptly notify District in writing and any changes deemed necessary by District shall be made as provided in Contract for changes in Work.

6.13.1.1 National Electrical Safety Code, U. S. Department of Commerce

6.13.1.2 National Board of Fire Underwriters' Regulations

6.13.1.3 International Building Code, latest addition, and the California Code of Regulations, title 24, and other amendments

6.13.1.4 Manual of Accident Prevention in Construction, latest edition, published by A.G.C. of America

6.13.1.5 Industrial Accident Commission's Safety Orders, State of California

6.13.1.6 Regulations of the State Fire Marshall (title 19, California Code of Regulations) and Pertinent Local Fire Safety Codes

6.13.1.7 Americans with Disabilities Act

6.13.1.8 Education Code of the State of California

6.13.1.9 Government Code of the State of California

6.13.1.10 Labor Code of the State of California, division 2, part 7, Public Works and Public Agencies

6.13.1.11 Public Contract Code of the State of California

6.13.1.12 California Art Preservation Act

6.13.1.13 U. S. Copyright Act

6.13.1.14 U. S. Visual Artists Rights Act

6.13.2 Contractor shall comply with all applicable mitigation measures, if any, adopted by any public agency with respect to this Project pursuant to the California Environmental Quality Act (Public Resources Code section 21000 et seq.).

6.13.3 If Contractor performs any Work that it knew, or through exercise of reasonable care should have known, to be contrary to any applicable laws, ordinance, rules, or regulations, Contractor shall bear all costs arising therefrom and arising from the correction of said Work.

6.13.4 Where Specifications or Drawings state that materials, processes, or procedures must be approved by the DSA, State Fire Marshall, or other body or agency, Contractor shall be responsible for satisfying requirements of such bodies or agencies applicable at the time the Work is performed, and as determined by those bodies or agencies.

6.14 Safety/Protection of Persons and Property

6.14.1 The Contractor will be solely and completely responsible for conditions of the Work Site, including safety of all persons and property during performance of the Work. This requirement will apply continuously and not be limited to normal working hours.

6.14.2 The wearing of hard hats will be mandatory at all times for all personnel on Site. Contractor shall supply sufficient hard hats to properly equip all employees and visitors.

6.14.3 Any construction review of the Contractor's performance is not intended to include review of the adequacy of the Contractor's safety measures in, on, or near the Work Site.

6.14.4 Implementation and maintenance of safety programs shall be the sole responsibility of the Contractor.

6.14.5 The Contractor shall furnish to the District a copy of the Contractor's safety plan within the time frame indicated in the Contract Documents and specifically adapted for the Project.

6.14.6 Contractor shall be responsible for all damages to persons or property that occur as a result of its fault or negligence in connection with the prosecution of this Contract and shall take all necessary measures and be responsible for the proper care and completion and final acceptance by District. All Work shall be solely at Contractor's risk with the exception of damage to the Work caused by "acts of God" as defined in Public Contract Code section 7105.

6.14.7 Contractor shall take, and require Subcontractors to take, all necessary precautions for safety of workers on the Project and shall comply with all applicable federal, state, local, and other safety laws, standards, orders, rules, regulations, and building codes to prevent accidents or injury to persons on, about, or adjacent to premises where Work is being performed and to provide a safe and healthful place of employment. Contractor shall furnish, erect, and properly maintain at all times, all necessary safety devices, safeguards, construction canopies, signs, nets, barriers, lights, and watchmen for protection of workers and the public and shall post danger signs warning against hazards created by such features in the course of construction.

6.14.8 Hazards Control – Contractor shall store volatile wastes in covered metal containers and remove them from the Site daily. Contractor shall prevent accumulation of wastes that create hazardous conditions. Contractor shall provide adequate ventilation during use of volatile or noxious substances.

6.14.9 Contractor shall designate a responsible member of its organization on the Project, whose duty shall be to post information regarding protection and obligations of workers and other notices required under occupational safety and health laws, to comply with reporting and other occupational safety requirements, and to protect the life, safety, and health of workers. Name and position of person so designated shall be reported to District by Contractor.

6.14.10 Contractor shall correct any violations of safety laws, rules, orders, standards, or regulations. Upon the issuance of a citation or notice of violation by the Division of Occupational Safety and Health, Contractor shall correct such violation promptly.

6.14.11 Contractor shall comply with any District storm water requirements that are approved by the District and applicable to the Project, at no additional cost to the District.

6.14.12 In an emergency affecting safety of life or of work or of adjoining property, Contractor, without special instruction or authorization, shall act, at its discretion, to prevent such threatened loss or injury. Any compensation claimed by Contractor on account of emergency work shall be determined by agreement.

6.14.13 All salvage materials will become the property of the Contractor and shall be removed from the Site unless otherwise called for in the Contract Documents. However, the District reserves the right to designate certain items of value that shall be turned over to the District unless otherwise directed by District.

6.14.14 All connections to public utilities and/or existing on-site services shall be made and maintained in such a manner as to not interfere with the continuing use of same by the District during the entire progress of the Work.

6.14.15 Contractor shall provide such heat, covering, and enclosures as are necessary to protect all Work, materials, equipment, appliances, and tools against damage by weather conditions, such as extreme heat, cold, rain, snow, dry winds, flooding, or dampness.

6.14.16 The Contractor shall protect and preserve the Work from all damage or accident, providing any temporary roofs, window and door coverings, boxings, or other construction as required by the Architect. The Contractor shall be responsible for existing structures, walks, roads, trees, landscaping, and/or improvements in working areas; and shall provide adequate protection therefore. If temporary removal is necessary of any of the above items, or damage occurs due to the Work, the Contractor shall replace same at his expense with same kind, quality, and size of Work or item damaged. This shall include any adjoining property of the District and others.

6.14.17 Contractor shall take adequate precautions to protect existing roads, sidewalks, curbs, pavements, utilities, adjoining property, and structures (including, without limitation, protection from settlement or loss of lateral support), and to avoid damage thereto, and repair any damage thereto caused by construction operations.

6.14.18 Contractor shall confine apparatus, the storage of materials, and the operations of workers to limits indicated by law, ordinances, permits, or directions of Architect, and shall not interfere with the Work or unreasonably encumber Premises or overload any structure with materials. Contractor shall enforce all instructions of District and Architect regarding signs, advertising, fires, and smoking, and require that all workers comply with all regulations while on Project Site.

6.14.19 Contractor, Contractor's employees, Subcontractors, Subcontractors' employees, or any person associated with the Work shall conduct themselves in a manner appropriate for a school site. No verbal or physical contact with neighbors, students, and faculty, profanity, or inappropriate attire or behavior will be permitted. District may require Contractor to permanently remove non-complying persons from Project Site.

6.14.20 Contractor shall take care to prevent disturbing or covering any survey markers, monuments, or other devices marking property boundaries or corners. If such markers are disturbed, Contractor shall have a civil engineer, registered as a professional engineer in California, replace them at no cost to District.

6.14.21 In the event that the Contractor enters into any agreement with owners of any adjacent property to enter upon the adjacent property for the purpose of performing the Work, Contractor shall fully indemnify, defend, and hold harmless each person, entity, firm, or agency that owns or has any interest in adjacent property. The form and content of the agreement of indemnification shall be

approved by the District prior to the commencement of any Work on or about the adjacent property. The Contractor shall also indemnify the District as provided in the indemnification provision herein. These provisions shall be in addition to any other requirements of the owners of the adjacent property.

6.15 Working Evenings and Weekends

Contractor may be required to work increased hours, evenings, and/or weekends at no additional cost to the District. Contractor shall give the District seventy-two (72) hours' notice prior to performing any evening and/or weekend work. Contractor shall perform all evening and/or weekend work only upon District's approval and in compliance with all applicable rules, regulations, laws, and local ordinances including, without limitation, all noise and light limitations. Contractor shall reimburse the District for any increased or additional Inspector charges as a result of Contractor's increased hours, or evening and/or weekend work.

6.16 Cleaning Up

6.16.1 The Contractor shall provide all services, labor, materials, and equipment necessary for protecting and securing the Work, all school occupants, furnishings, equipment, and building structure from damage until its completion and final acceptance by District. Dust barriers shall be provided to isolate dust and dirt from construction operations. At completion of the Work and portions thereof, Contractor shall clean to the original state any areas beyond the Work area that become dust laden as a result of the Work. The Contractor must erect the necessary warning signs and barricades to ensure the safety of all school occupants. The Contractor at all times must maintain good housekeeping practices to reduce the risk of fire damage and must make a fire extinguisher, fire blanket, and/or fire watch, as applicable, available at each location where cutting, braising, soldering, and/or welding is being performed or where there is an increased risk of fire.

6.16.2 Contractor at all times shall keep Premises, including property immediately adjacent thereto, free from debris such as waste, rubbish (including personal rubbish of workers, e.g., food wrappers, etc.), and excess materials and equipment caused by the Work. Contractor shall not leave debris under, in, or about the Premises (or surrounding property or neighborhood), but shall promptly remove same from the Premises on a daily basis. If Contractor fails to clean up, District may do so and the cost thereof shall be charged to Contractor. If Contract is for work on an existing facility, Contractor shall also perform specific clean-up on or about the Premises upon request by the District as it deems necessary for the continuing education process. Contractor shall comply with all related provisions of the Specifications.

6.16.3 If the Construction Manager, Architect, or District observes the accumulation of trash and debris, the District will give the Contractor a 24-hour written notice to mitigate the condition.

6.16.4 Should the Contractor fail to perform the required clean-up, or should the clean-up be deemed unsatisfactory by the District, the District will then perform the clean-up. All cost associated with the clean-up work (including all travel, payroll burden, and costs for supervision) will be deducted from the Contract Price, or District may withhold those amounts from payment(s) to Contractor.

7. SUBCONTRACTORS

7.1 Contractor shall provide the District with information for all Subcontracts as indicated in the Contractor's Submittals and Schedules Section herein.

7.2 No contractual relationship exists between the District and any Subcontractor, supplier, or sub-subcontractor by reason of this Contract.

7.3 Contractor agrees to bind every Subcontractor by terms of this Contract as far as those terms that are applicable to Subcontractor's work including, without limitation, all labor, wage & hour, apprentice and related provisions and requirements. If Contractor shall subcontract any part of this Contract, Contractor shall be as fully responsible to District for acts and omissions of any Subcontractor and of persons either directly or indirectly employed by any Subcontractor, including Subcontractor caused Project delays, as it is for acts and omissions of persons directly employed by Contractor. The divisions or sections of the Specifications and/or the arrangement of the drawings are not intended to control the Contractor in dividing the Work among Subcontractors or limit the work performed by any trade.

7.4 District's consent to, or approval of, or failure to object to, any Subcontractor under this Contract shall not in any way relieve Contractor of any obligations under this Contract and no such consent shall be deemed to waive any provisions of this Contract.

7.5 Contractor is directed to familiarize itself with sections 4100 through 4114 of the Public Contract Code of the State of California, as regards subletting and subcontracting, and to comply with all applicable requirements therein. In addition, Contractor is directed to familiarize itself with sections 1720 through 1861 of the Labor Code of the State of California, as regards the payment of prevailing wages and related issues, and to comply with all applicable requirements therein including, without limitation, section 1775 and the Contractor's and Subcontractors' obligations and liability for violations of prevailing wage law and other applicable laws.

7.6 No Contractor whose Bid is accepted shall, without consent of the awarding authority and in full compliance with section 4100 et seq. of the Public Contract Code, including, without limitation, sections 4107, 4107.5, and 4109 of the Public Contract Code, and section 1771.1 of the Labor Code, either:

7.6.1 Substitute any person as a Subcontractor in place of the Subcontractor designated in the original Bid; or

7.6.2 Permit any Subcontract to be assigned or transferred, or allow any portion of the Work to be performed by anyone other than the original Subcontractor listed in the Bid; or

7.6.3 Sublet or subcontract any portion of the Work in excess of one-half of one percent (0.5%) of the Contractor's total bid as to which his original bid did not designate a Subcontractor.

7.7 The Contractor shall be responsible for the coordination of the trades, Subcontractors, sub-subcontractors, and material or equipment suppliers working on the Project.

7.7.1 If the Contract is valued at $1 million or more and uses, or plans to use, state bond funds, then Contractor is responsible for ensuring that first tier Subcontractors holding C-4, C-7, C-10, C-16, C-20, C-34, C-36, C-38, C-42, C-43, and/or C-46 licenses are prequalified by the District to work on the Project pursuant to Public Contract Code section 20111.6.

7.7.2 Contractor is responsible for ensuring that all Subcontractors are properly registered as public works contractors by the Department of Industrial Relations.

7.8 Contractor is solely responsible for settling any differences between the Contractor and its Subcontractor(s) or between Subcontractors.

7.9 Contractor must include in all of its subcontracts the assignment provisions as indicated in the Termination section of these General Conditions.

8. OTHER CONTRACTS/CONTRACTORS

8.1 District reserves the right to let other contracts, and/or to perform work with its own forces, in connection with the Project. Contractor shall afford other contractors reasonable opportunity for introduction and storage of their materials and execution of their work and shall properly coordinate and connect Contractor's Work with the work of other contractors.

8.2 In addition to Contractor's obligation to protect its own Work, Contractor shall protect the work of any other contractor that Contractor encounters while working on the Project.

8.3 If any part of Contractor's Work depends for proper execution or results upon work of District or any other contractor, the Contractor shall inspect and, before proceeding with its Work, promptly report to the District in writing any defects in District's or any other contractor's work that render Contractor's Work unsuitable for proper execution and results. Contractor shall be held accountable for damages to District for District's or any other contractor's work that Contractor failed to inspect or should have inspected. Contractor's failure to inspect and report shall constitute Contractor's acceptance of all District's or any other contractor's work as fit and proper for reception of Contractor's Work, except as to defects that may develop in District's or any other contractor's work after execution of Contractor's Work and not caused by execution of Contractor's Work.

8.4 To ensure proper execution of its subsequent work, Contractor shall measure and inspect work already in place and shall at once report to the District in writing any discrepancy between that executed work and the Contract Documents.

8.5 Contractor shall ascertain to its own satisfaction the scope of the Project and nature of District's or any other contracts that have been or may be awarded by District in prosecution of the Project to the end that Contractor may perform this Contract in light of the other contracts, if any.

8.6 Nothing herein contained shall be interpreted as granting to Contractor exclusive occupancy of the Site, the Premises, or of the Project. Contractor shall not cause any unnecessary hindrance or delay to the use and/or school operation(s) of the Premises and/or to District or any other contractor working on the Project. If simultaneous execution of any contract or school operation is likely to cause interference with performance of Contractor's Contract, Contractor shall coordinate with those contractor(s), person(s), and/or entity(s) and shall notify the District of the resolution.

9. DRAWINGS AND SPECIFICATIONS

9.1 A complete list of all Drawings that form a part of the Contract is to be found as an index on the Drawings themselves, and/or may be provided to the Contractor and/or in the Table of Contents.

9.2 Materials or Work described in words that so applied have a well-known technical or trade meaning shall be deemed to refer to recognized standards, unless noted otherwise.

9.3 Trade Name or Trade Term. It is not the intention of this Contract to go into detailed descriptions of any materials and/or methods commonly known to the trade under "trade name" or "trade term." The mere mention or notation of "trade name" or "trade term" shall be considered a sufficient notice to Contractor that it will be required to complete the work so named, complete, finished, and operable, with all its appurtenances, according to the best practices of the trade.

9.4 The naming of any material and/or equipment shall mean furnishing and installing of same, including all incidental and accessory items thereto and/or labor therefor, as per best practices of the trade(s) involved, unless specifically noted otherwise.

9.5 Contract Documents are complementary, and what is called for by one shall be binding as if called for by all. As such, Drawings and Specifications are intended to be fully cooperative and to agree. However, if Contractor observes that Drawings and Specifications are in conflict with the Contract Documents, Contractor shall promptly notify District and Architect in writing, and any necessary changes shall be made as provided in the Contract Documents.

9.6 In the case of discrepancy or ambiguity in the Contract Documents, the order of precedence in the Agreement shall prevail. However, in the case of discrepancy or ambiguity solely between and among the Drawings and Specifications, the discrepancy or ambiguity shall be resolved in favor of the interpretation that will provide District with the functionally complete and operable Project described in the Drawings and Specifications. In case of ambiguity, conflict, or lack of information, District will furnish clarifications with reasonable promptness.

9.7 Drawings and Specifications are intended to comply with all laws, ordinances, rules, and regulations of constituted authorities having jurisdiction, and where referred to in the Contract Documents, the laws, ordinances, rules, and regulations shall be considered as a part of the Contract within the limits specified. Contractor shall bear all expense of correcting work done contrary to said laws, ordinances, rules, and regulations.

9.8 As required by Section 4-317(c), Part 1, Title 24, CCR: "Should any existing conditions such as deterioration or non-complying construction be discovered which is not covered by the DSA-approved documents wherein the finished work will not comply with Title 24, California Code of Regulations, a construction change document, or a separate set of plans and specifications, detailing and specifying the required repair work shall be submitted to and approved by DSA before proceeding with the repair work."

9.9 Ownership of Drawings

All copies of Plans, Drawings, Designs, Specifications, and copies of other incidental architectural and engineering work, or copies of other Contract Documents furnished by District, are the property of District. They are not to be used by Contractor in other work and, with the exception of signed sets of Contract Documents, are to be returned to District on request at completion of Work, or may be used by District as it may require without any additional costs to District. Neither the Contractor nor any Subcontractor, or material or equipment supplier shall own or claim a copyright in the Drawings, Specifications, and other documents prepared by the Architect. District hereby grants the Contractor, Subcontractors, sub-subcontractors, and material or equipment suppliers a limited license to use applicable portions of the Drawings prepared for the Project in the execution of their Work under the Contract Documents.

10. CONTRACTOR'S SUBMITTALS AND SCHEDULES

Contractor's submittals shall comply with the provisions and requirements of the Specifications including, without limitation Submittals.

10.1 Schedule of Work, Schedule of Submittals, and Schedule of Values

10.1.1 Within **TEN (10)** calendar days after the date of the Notice to Proceed (unless otherwise specified in the Specifications), the Contractor shall prepare and submit to the District for review, in a form supported by sufficient data to substantiate its accuracy as the District may require:

10.1.1.1 Preliminary Schedule. A preliminary schedule of construction indicating the starting and completion dates of the various stages of the Work, including any information and following any form as may be specified in the Specifications. Once approved by District, this shall become the Construction Schedule. This schedule shall include and identify all tasks that are on the Project's critical path with a specific determination of the start and completion of each critical path task as well as all Contract milestones and each milestone's completion date(s) as may be required by the District.

10.1.1.1.1 The District is not required to approve a preliminary schedule of construction with early completion, i.e., one that shows early completion dates for the Work and/or milestones. Contractor shall not be entitled to extra compensation if the District approves a Construction Schedule with an early completion date and Contractor completes the Project beyond the date shown in the schedule but within the Contract Time. A Construction Schedule showing the Work completed in less than the Contract Time, the time between the early completion date and the end of the Contract Time shall be Float.

10.1.1.2 Preliminary Schedule of Values. A preliminary schedule of values for all of the Work, which must include quantities and prices of items aggregating the Contract Price and must subdivide the Work into component parts in sufficient detail to serve as the basis for progress payments during construction. Unless the Special Conditions contain different limits, this preliminary schedule of values shall include, at a minimum, the following information and the following structure:

10.1.1.2.1 Divided into at least the following categories:

10.1.1.2.1.1 Overhead and profit;
10.1.1.2.1.2 Supervision;
10.1.1.2.1.3 General conditions;
10.1.1.2.1.4 Layout;
10.1.1.2.1.5 Mobilization;
10.1.1.2.1.6 Submittals;
10.1.1.2.1.7 Bonds and insurance;
10.1.1.2.1.8 Close-out/Certification documentation;
10.1.1.2.1.9 Demolition;
10.1.1.2.1.10 Installation;
10.1.1.2.1.11 Rough-in;
10.1.1.2.1.12 Finishes;
10.1.1.2.1.13 Testing;
10.1.1.2.1.14 Punchlist and District acceptance.

10.1.1.2.2 And also divided by each of the following areas:

10.1.1.2.2.1 Site work;
10.1.1.2.2.2 By each building;
10.1.1.2.2.3 By each floor.

10.1.1.2.3 The preliminary schedule of values shall not provide for values any greater than the following percentages of the Contract value:

10.1.1.2.3.1 Mobilization and layout combined to equal not more than 1%;
10.1.1.2.3.2 Submittals, samples and shop drawings combined to equal not more than 3%;
10.1.1.2.3.3 Bonds and insurance combined to equal not more than 2%.

10.1.1.2.4 Closeout documentation shall have a value in the preliminary schedule of not less than 5%.

10.1.1.2.5 Notwithstanding any provision of the Contract Documents to the contrary, payment of the Contractor's overhead, supervision, general conditions costs, and profit, as reflected in the Cost Breakdown, shall be paid based on percentage complete, with the disbursement of Progress Payments and the Final Payment.

10.1.1.2.6 Contractor shall certify that the preliminary schedule of values as submitted to the District is accurate and reflects the costs as developed in preparing Contractor’s bid. For example, without limiting the foregoing,

Contractor shall not "front-load" the preliminary schedule of values with dollar amounts greater than the value of activities performed early in the Project.

10.1.1.2.7 The preliminary schedule of values shall be subject to the District's review and approval of the form and content thereof. In the event that the District objects to any portion of the preliminary schedule of values, the District shall notify the Contractor, in writing, of the District's objection(s) to the preliminary schedule of values. Within five (5) calendar days of the date of the District's written objection(s), Contractor shall submit a revised preliminary schedule of values to the District for review and approval. The foregoing procedure for the preparation, review and approval of the preliminary schedule of values shall continue until the District has approved the entirety of the preliminary schedule of values.

10.1.1.2.8 Once the preliminary schedule of values is approved by the District, this shall become the Schedule of Values. The Schedule of Values shall not be thereafter modified or amended by the Contractor without the prior consent and approval of the District, which may be granted or withheld in the sole discretion of the District.

10.1.1.3 Preliminary Schedule of Submittals. A preliminary schedule of submittals, including Shop Drawings, Product Data, and Samples submittals. Once approved by District, this shall become the Submittal Schedule. All submittals shall be forwarded to the District by the date indicated on the approved Submittal Schedule, unless an earlier date is necessary to maintain the Construction Schedule, in which case those submittals shall be forwarded to the District so as not to delay the Construction Schedule. Upon request by the District, Contractor shall provide an electronic copy of all submittals to the District. All submittals shall be submitted no later than 90 days after the Notice to Proceed.

10.1.1.4 Safety Plan. Contractor's Safety Plan specifically adapted for the Project. Contractor's Safety Plan shall comply with the following requirements:

10.1.1.4.1 All applicable requirements of California Division of Occupational Safety and Health ("CalOSHA") and/or of the United States Occupational Safety and Health Administration ("OSHA").

10.1.1.4.2 All provisions regarding Project safety, including all applicable provisions in these General Conditions.

10.1.1.4.3 Contractor's Safety Plan shall be in English and in the language(s) of the Contractor's and its Subcontractors' employees.

10.1.1.5 Complete Registered Subcontractors List. The name, address, telephone number, facsimile number, California State Contractors License number, classification, DIR registration number and monetary value of all Subcontracts of any tier for parties furnishing labor, material, or equipment for completion of the Project.

10.1.2 Contractor must provide all schedules both in hard copy and electronically, in a format (e.g., Microsoft Project or Primavera) approved in advance by the District.

10.1.3 The District will review the schedules submitted and the Contractor shall make changes and corrections in the schedules as requested by the District and resubmit the schedules until approved by the District.

10.1.4 The District shall have the right at any time to revise the schedule of values if, in the District's sole opinion, the schedule of values does not accurately reflect the value of the Work performed.

10.1.5 All submittals and schedules must be approved by the District before Contractor can rely on them as a basis for payment.

10.2 Monthly Progress Schedule(s)

10.2.1 Contractor shall provide Monthly Progress Schedule(s) to the District. A Monthly Progress Schedule shall update the approved Construction Schedule or the last Monthly Progress Schedule, showing all work completed and to be completed as well as updating the Registered Subcontractors List. The monthly Progress Schedule shall be sent within the timeframe requested by the District and shall be in a format acceptable to the District and contain a written narrative of the progress of work that month and any changes, delays, or events that may affect the work. The process for District approval of the Monthly Progress Schedule shall be the same as the process for approval of the Construction Schedule.

10.2.2 Contractor shall submit Monthly Progress Schedule(s) with all payment applications.

10.2.3 Contractor must provide all schedules both in hard copy and electronically, in a format (e.g., Microsoft Project or Primavera) approved in advance by the District.

10.2.4 The District will review the schedules submitted and the Contractor shall make changes and corrections in the schedules as requested by the District and resubmit the schedules until approved by the District.

10.2.5 The District shall have the right at any time to revise the schedule of values if, in the District’s sole opinion, the schedule of values does not accurately reflect the value of the Work performed.

10.2.6 All submittals and schedules must be approved by the District before Contractor can rely on them as a basis for payment.

10.3 Material Safety Data Sheets (MSDS)

Contractor is required to ensure Material Safety Data Sheets are available in a readily accessible place at the Work Site for any material requiring a Material Safety Data Sheet per the federal “Hazard Communication” standard, or employees’ “right to know” law. The Contractor is also required to ensure proper labeling on substances brought onto the job site and that any person working with the material or within the general area of the material is informed of the hazards of the substance and follows proper handling and protection procedures. Two additional copies of the Material Safety Data Sheets shall also be submitted directly to the District.

11. SITE ACCESS, CONDITIONS, AND REQUIREMENTS

11.1 Site Investigation

Before bidding on this Work, Contractor shall make a careful investigation of the Site and thoroughly familiarize itself with the requirements of the Contract. By the act of submitting a bid for the Work included in this Contract, Contractor shall be deemed to have made a complete study and investigation, and to be familiar with and accepted the existing conditions of the Site.

Prior to commencing the Work, Contractor and the District's representative shall survey the Site to document the condition of the Site. Contractor will record the survey in digital videotape format and provide an electronic copy to the District within fourteen (14) days of the survey. This electronic record shall serve as a basis for determining any damages caused by the Contractor during the Project. The Contractor may also document any pre-existing conditions in writing, provided that both the Contractor and the District's representative agree on said conditions and sign a memorandum documenting the same.

11.2 Soils Investigation Report

11.2.1 When a soils investigation report obtained from test holes at Site or for the Project is available, that report may be available to the Contractor but shall not be a part of this Contract and shall not alleviate or excuse the Contractor's obligation to perform its own investigation. Any information obtained from that report or any information given on Drawings as to subsurface soil condition or to elevations of existing grades or elevations of underlying rock is approximate only, is not guaranteed, does not form a part of this Contract, and Contractor may not rely thereon. By submitting its bid, Contractor acknowledges that it has made visual examination of Site and has made whatever tests Contractor deems appropriate to determine underground condition of soil.

11.2.2 Contractor agrees that no claim against District will be made by Contractor for damages and hereby waives any rights to damages if, during progress of Work, Contractor encounters subsurface or latent conditions at Site materially differing from those shown on Drawings or indicated in Specifications, or for unknown conditions of an unusual nature that differ materially from those ordinarily encountered in the work of the character provided for in Plans and Specifications, except as indicated in the provisions of these General Conditions regarding trenches, trenching, and/or existing utility lines.

11.3 Access to Work

District and its representatives shall at all times have access to Work wherever it is in preparation or progress, including storage and fabrication. Contractor shall provide safe and proper facilities for such access so that District's representatives may perform their functions.

11.4 Layout and Field Engineering

11.4.1 All field engineering required for layout of this Work and establishing grades for earthwork operations shall be furnished by Contractor at its expense. This Work shall be done by a qualified, California-registered civil engineer approved

in writing by District and Architect. Any required Record and/or As-Built Drawings of Site development shall be prepared by the approved civil engineer.

11.4.2 The Contractor shall be responsible for having ascertained pertinent local conditions such as location, accessibility, and general character of the Site and for having satisfied itself as to the conditions under which the Work is to be performed. Contractor shall follow best practices, including but not limited to potholing to avoid utilities. District shall not be liable for any claim for allowances because of Contractor's error, failure to follow best practices, or negligence in acquainting itself with the conditions at the Site.

11.4.3 Contractor shall protect and preserve established benchmarks and monuments and shall make no changes in locations without the prior written approval of District. Contractor shall replace any benchmarks or monuments that are lost or destroyed subsequent to proper notification of District and with District's approval.

11.5 Utilities

Utilities shall be provided as indicated in the Specifications.

11.6 Sanitary Facilities

Sanitary facilities shall be provided as indicated in the Specifications.

11.7 Surveys

Contractor shall provide surveys done by a California-licensed civil engineer surveyor to determine locations of construction, grading, and site work as required to perform the Work.

11.8 Regional Notification Center

The Contractor, except in an emergency, shall contact the appropriate regional notification center at least two (2) days prior to commencing any excavation if the excavation will be conducted in an area or in a private easement that is known, or reasonably should be known, to contain subsurface installations other than the underground facilities owned or operated by the District, and obtain an inquiry identification number from that notification center. No excavation shall be commenced and/or carried out by the Contractor unless an inquiry identification number has been assigned to the Contractor or any Subcontractor and the Contractor has given the District the identification number. Any damages arising from Contractor's failure to make appropriate notification shall be at the sole risk and expense of the Contractor. Any delays caused by failure to make appropriate notification shall be at the sole risk of the Contractor and shall not be considered for an extension of the Contract Time.

11.9 Existing Utility Lines

11.9.1 Pursuant to Government Code section 4215, District assumes the responsibility for removal, relocation, and protection of main or trunk utility lines and facilities located on the construction Site at the time of commencement of construction under this Contract with respect to any such utility facilities that are not identified in the Plans and Specifications. Contractor shall not be assessed for

liquidated damages for delay in completion of the Project caused by failure of District or the owner of a utility to provide for removal or relocation of such utility facilities.

11.9.2 Locations of existing utilities provided by District shall not be considered exact, but approximate within a reasonable margin and shall not relieve Contractor of responsibilities to exercise reasonable care or costs of repair due to Contractor's failure to do so. District shall compensate Contractor for the costs of locating, repairing damage not due to the failure of Contractor to exercise reasonable care, and removing or relocating such utility facilities not indicated in the Plans and Specifications with reasonable accuracy, and for equipment necessarily idle during such work.

11.9.3 No provision herein shall be construed to preclude assessment against Contractor for any other delays in completion of the Work. Nothing in this Article shall be deemed to require District to indicate the presence of existing service laterals, appurtenances, or other utility lines, within the exception of main or trunk utility lines or whenever the presence of these utilities on the Site of the construction Project can be inferred from the presence of other visible facilities, such as buildings, meter junction boxes, on or adjacent to the Site of the construction.

11.9.4 If Contractor, while performing Work under this Contract, discovers utility facilities not identified by District in Contract Plans and Specifications, Contractor shall immediately notify the District and the utility in writing. The cost of repair for damage to above-mentioned visible facilities without prior written notification to the District shall be borne by the Contractor.

11.10 Notification

Contractor understands, acknowledges and agrees that the purpose for prompt notification to the District pursuant to these provisions is to allow the District to investigate the condition(s) so that the District shall have the opportunity to decide how the District desires to proceed as a result of the condition(s). Accordingly, failure of Contractor to promptly notify the District in writing, pursuant to these provisions, shall constitute Contractor's waiver of any claim for damages or delay incurred as a result of the condition(s).

11.11 Hazardous Materials

Contractor shall comply with all provisions and requirements of the Contract Documents related to hazardous materials including, without limitation, Hazardous Materials Procedures and Requirements.

11.12 No Signs

Neither the Contractor nor any other person or entity shall display any signs not required by law or the Contract Documents at the Site, fences trailers, offices, or elsewhere on the Site without specific prior written approval of the District.

12. TRENCHES

12.1 Trenches Greater Than Five Feet

Pursuant to Labor Code section 6705, if the Contract Price exceeds $25,000 and involves the excavation of any trench or trenches five (5) feet or more in depth, the Contractor shall, in advance of excavation, promptly submit to the District and/or a registered civil or structural engineer employed by the District or Architect, a detailed plan, stamped by a licensed engineer retained by the Contractor, showing the design of shoring for protection from the hazard of caving ground during the excavation of such trench or trenches.

12.2 Excavation Safety

If such plan varies from the Shoring System Standards established by the Construction Safety Orders, the plan shall be prepared by a registered civil or structural engineer, but in no case shall such plan be less effective than that required by the Construction Safety Orders. No excavation of such trench or trenches shall be commenced until said plan has been accepted by the District or by the person to whom authority to accept has been delegated by the District.

12.3 No Tort Liability of District

Pursuant to Labor Code section 6705, nothing in this Article shall impose tort liability upon the District or any of its employees.

12.4 No Excavation without Permits

The Contractor shall not commence any excavation Work until it has secured all necessary permits including the required CalOSHA excavation/shoring permit. Any permits shall be prominently displayed on the Site prior to the commencement of any excavation.

12.5 Discovery of Hazardous Waste and/or Unusual Conditions

12.5.1 Pursuant to Public Contract Code section 7104, if the Work involves digging trenches or other excavations that extend deeper than four feet below the Surface, the Contractor shall promptly, and before the following conditions are disturbed, notify the District, in writing, of any:

12.5.1.1 Material that the Contractor believes may be material that is hazardous waste, as defined in section 25117 of the Health and Safety Code, is required to be removed to a Class I, Class II, or Class III disposal site in accordance with provisions of existing law.

12.5.1.2 Subsurface or latent physical conditions at the Site differing from those indicated.

12.5.1.3 Unknown physical conditions at the Site of any unusual nature, different materially from those ordinarily encountered and generally recognized as inherent in work of the character provided for in the Contract.

12.5.2 The District shall promptly investigate the conditions, and if it finds that the conditions do materially so differ, or do involve hazardous waste, and cause a decrease or increase in the Contractor's cost of, or the time required for, performance of any part of the Work, shall issue a Change Order under the procedures described herein.

12.5.3 In the event that a dispute arises between District and the Contractor whether the conditions materially differ, or involve hazardous waste, or cause a decrease or increase in the Contractor's cost of, or time required for, performance of any part of the Work, the Contractor shall not be excused from any scheduled completion date provided for by the Contract, but shall proceed with all work to be performed under the Contract. The Contractor shall retain any and all rights provided either by Contract or by law that pertain to the resolution of disputes and protests.

13. INSURANCE AND BONDS

13.1 Insurance

Unless different provisions and/or limits are indicated in the Special Conditions, all insurance required of Contractor and/or its Subcontractor(s) shall be in the amounts and include the provisions set forth herein.

13.1.1 Commercial General Liability and Automobile Liability Insurance

13.1.1.1 Contractor shall procure and maintain, during the life of this Contract, Commercial General Liability Insurance and Automobile Liability Insurance that shall protect Contractor, District, State, Construction Manager(s), Project Inspector(s), and Architect(s) from all claims for bodily injury, property damage, personal injury, death, advertising injury, and medical payments arising from, or in connection with, operations under this Contract. This coverage shall be provided in a form at least as broad as Insurance Services (ISO) Form CG 0001 11188. Contractor shall ensure that Products Liability and Completed Operations coverage, Fire Damage Liability coverage, and Automobile Liability Insurance coverage including owned, non-owned, and hired automobiles, are included within the above policies and at the required limits, or Contractor shall procure and maintain these coverages separately.

13.1.1.2 Contractor's deductible or self-insured retention for its Commercial General Liability Insurance policy shall not exceed $25,000 unless approved in writing by District.

13.1.1.3 All such policies shall be written on an occurrence form.

13.1.2 Excess Liability Insurance

13.1.2.1 If Contractor's underlying policy limits are less than required, subject to 13.1.2.3 below, Contractor may procure and maintain, during the life of this Contract, an Excess Liability Insurance Policy to meet the policy limit requirements of the required policies in order to satisfy, in the aggregate with its underlying policy, the insurance requirements herein..

13.1.2.2 There shall be no gap between the per occurrence amount of any underlying policy and the start of the coverage under the Excess Liability Insurance Policy. Any Excess Liability Insurance Policy shall be written on a following form and shall protect Contractor, District, State, Construction Manager(s), Project Manager(s), and Architect(s) in amounts and including the provisions as set forth in the Supplementary Conditions (if any) and/or Special Conditions, and that complies with all requirements for Commercial General Liability and Automobile Liability and Employers' Liability Insurance.

13.1.2.3 The District, in its sole discretion, may accept the Excess Liability Insurance Policy that brings Contractor's primary limits to the minimum requirements herein.

13.1.3 **Subcontractor(s):** Contractor shall require its Subcontractor(s), if any, to procure and maintain Commercial General Liability Insurance, Automobile Liability Insurance, and Excess Liability Insurance (if Subcontractor elects to satisfy, in part the insurance required herein by procuring and maintaining an Excess Liability Insurance Policy) with forms of coverage and limits equal to the amounts required of the Contractor.

13.1.4 Workers' Compensation and Employers' Liability Insurance

13.1.4.1 In accordance with provisions of section 3700 of the California Labor Code, the Contractor and every Subcontractor shall be required to secure the payment of compensation to its employees.

13.1.4.2 Contractor shall procure and maintain, during the life of this Contract, Workers' Compensation Insurance and Employers' Liability Insurance for all of its employees engaged in work under this Contract, on/or at the Site of the Project. This coverage shall cover, at a minimum, medical and surgical treatment, disability benefits, rehabilitation therapy, and survivors' death benefits. Contractor shall require its Subcontractor(s), if any, to procure and maintain Workers' Compensation Insurance and Employers' Liability Insurance for all employees of Subcontractor(s). Any class of employee or employees not covered by a Subcontractor's insurance shall be covered by Contractor's insurance. If any class of employee or employee engaged in Work under this Contract, on or at the Site of the Project, is not protected under the Workers' Compensation Insurance, Contractor shall provide, or shall cause a Subcontractor to provide, adequate insurance coverage for the protection of any employee(s) not otherwise protected before any of those employee(s) commence work.

13.1.5 Builder's Risk Insurance: Builder's Risk "All Risk" Insurance

Contractor shall procure and maintain, during the life of this Contract, Builder's Risk (Course of Construction), or similar first party property coverage acceptable to the District, issued on a replacement cost value basis. The cost shall be consistent with the total replacement cost of all insurable Work of the Project included within the Contract Documents. Coverage is to insure against all risks of accidental physical loss and shall include without limitation the perils of vandalism and/or malicious mischief (both without any limitation regarding vacancy or occupancy), sprinkler leakage, civil authority, theft, sonic disturbance, earthquake, flood, collapse, wind, rain, dust, fire, war, terrorism, lightning, smoke, and rioting. Coverage shall include debris removal, demolition, increased costs due to enforcement of all applicable

ordinances and/or laws in the repair and replacement of damaged and undamaged portions of the property, and reasonable costs for the Architect's and engineering services and expenses required as a result of any insured loss upon the Work and Project, including completed Work and Work in progress, to the full insurable value thereof.

13.1.6 Pollution Liability Insurance

13.1.6.1 Contractor shall procure and maintain Pollution Liability Insurance that shall protect Contractor, District, State, Construction Manager(s), Project Inspector(s), and Architect(s) from all claims for bodily injury, property damage, including natural resource damage, cleanup costs, removal, storage, disposal, and/or use of the pollutant arising from operations under this Contract, and defense, including costs and expenses incurred in the investigation, defense, or settlement of claims. Coverage shall apply to sudden and/or gradual pollution conditions resulting from the escape or release of smoke, vapors, fumes, acids, alkalis, toxic chemicals, liquids, or gases, natural gas, waste materials, or other irritants, contaminants, or pollutants, including asbestos. This coverage shall be provided in a form at least as broad as Insurance Services Offices, Inc. (ISO) Form CG 2415, or Contractor shall procure and maintain these coverages separately.

13.1.6.2 Contractor warrants that any retroactive date applicable to coverage under the policy shall predate the effective date of the Contract and that continuous coverage will be maintained or an extended reporting or discovery period will be exercised for a period of three (3) years, beginning from the time that the Work under the Contract is completed.

13.1.6.3 If Contractor is responsible for removing any pollutants from a site, then Contractor shall ensure that Any Auto, including owned, non-owned, and hired, is included within the above policies and at the required limits, to cover its automobile exposure from transporting the pollutants from the site to an approved disposal site. This coverage shall include the Motor Carrier Act Endorsement, MCS 90.

13.1.7 Proof of Insurance and Other Requirements: Endorsements and Certificates

13.1.7.1 Contractor shall not commence Work nor shall it allow any Subcontractor to commence Work under this Contract, until Contractor and its Subcontractor(s) have procured all required insurance and Contractor has delivered in duplicate to the District complete endorsements (or entire insurance policies) and certificates indicating the required coverages have been obtained, and the District has approved these documents.

13.1.7.2 Endorsements, certificates, and insurance policies shall include the following:

13.1.7.2.1 A clause stating the following, or other language acceptable to the District:

"This policy shall not be canceled until written notice to District, Architect, and Construction Manager stating date of the cancellation by the insurance

carrier. Date of cancellation may not be less than thirty (30) days after date of mailing notice."

13.1.7.2.2 Language stating in particular those insured, extent of insurance, location and operation to which insurance applies, expiration date, to whom cancellation and reduction notice will be sent, and length of notice period.

13.1.7.2.3 All endorsements, certificates and insurance policies shall state that District, its trustees, employees and agents, the State of California, Construction Manager(s), Project Manager(s), Inspector(s) and Architect(s) are named additional insureds under all policies except Workers' Compensation Insurance and Employers' Liability Insurance.

13.1.7.3 No policy shall be amended, canceled or modified, and the coverage amounts shall not be reduced, until Contractor or Contractor's broker has provided written notice to District, Architect(s), and Construction Manager(s) stating date of the amendment, modification, cancellation or reduction, and a description of the change. Date of amendment, modification, cancellation or reduction may not be less than thirty (30) days after date of mailing notice.

13.1.7.4 Insurance written on a "claims made" basis shall be retroactive to a date that coincides with or precedes Contractor's commencement of Work, including subsequent policies purchased as renewals or replacements. Said policy is to be renewed by the Contractor and all Subcontractors for a period of five (5) years following completion of the Work or termination of this Agreement. Such insurance must have the same coverage and limits as the policy that was in effect during the term of this Agreement, and will cover the Contractor and all Subcontractors for all claims made.

13.1.7.5 Contractor's and Subcontractors' insurance policy(s) shall be primary and non-contributory to any insurance or self-insurance maintained by District, its trustees, employees and/or agents, the State of California, Construction Manager(s), Project Manager(s), Inspector(s), and/or Architect(s).

13.1.7.6 All endorsements shall waive any right to subrogation against any of the named additional insureds.

13.1.7.7 Unless otherwise stated in the Special Conditions, all of Contractor's insurance shall be with insurance companies with an A.M. Best rating of no less than **A: VII**.

13.1.7.8 The insurance requirements set forth herein shall in no way limit the Contractor's liability arising out of or relating to the performance of the Work or related activities.

13.1.7.9 Failure of Contractor and/or its Subcontractor(s) to comply with the insurance requirements herein shall be deemed a material breach of the Contract.

13.1.8 Insurance Policy Limits

Unless different limits are indicated in the Special Conditions, the limits of insurance shall not be less than the following amounts:

Commercial General Liability	Product Liability and Completed Operations, Fire Damage Liability – Split Limit	$2,000,000 per occurrence; $4,000,000 aggregate
Automobile Liability	Any Auto – Combined Single Limit	$1,000,000
Workers' Compensation		Statutory limits pursuant to State law
Employers' Liability		$1,000,000
Builder's Risk (Course of Construction)		Issued for the value and scope of Work indicated herein.
Pollution Liability		$1,000,000 per claim; $2,000,000 aggregate

13.2 Contract Security - Bonds

13.2.1 Contractor shall furnish two surety bonds issued by a California admitted surety insurer as follows:

13.2.1.1 Performance Bond: A bond in an amount at least equal to one hundred percent (100%) of Contract Price as security for faithful performance of this Contract.

13.2.1.2 Payment Bond: A bond in an amount at least equal to one hundred percent (100%) of the Contract Price as security for payment of persons performing labor and/or furnishing materials in connection with this Contract.

13.2.2 Cost of bonds shall be included in the Bid and Contract Price.

13.2.3 All bonds related to this Project shall be in the forms set forth in these Contract Documents and shall comply with all requirements of the Contract Documents, including, without limitation, the bond forms.

14. WARRANTY/GUARANTEE/INDEMNITY

14.1 Warranty/Guarantee

14.1.1 The Contractor shall obtain and preserve for the benefit of the District, manufacturer's warranties on materials, fixtures, and equipment incorporated into the Work.

14.1.2 In addition to guarantees required elsewhere, Contractor shall, and hereby does guarantee and warrant all Work furnished on the job against all defects for a period of **ONE (1)** year after the later of the following dates, unless a longer period is provided for in the Contract Documents:

14.1.2.1 The acceptance by the District's governing board of the Work, subject to these General Conditions, or

14.1.2.2 The date that commissioning for the Project, if any, was completed.

At the District's sole option, Contractor shall repair or replace any and all of that Work, together with any other Work that may be displaced in so doing, that may prove defective in workmanship and/or materials within a **ONE (1)** year period from date of completion as defined above, unless a longer period is provided for in the Contract Documents, without expense whatsoever to District. In the event of failure of Contractor and/or Surety to commence and pursue with diligence said replacements or repairs within ten (10) days after being notified in writing, Contractor and Surety hereby acknowledge and agree that District is authorized to proceed to have defects repaired and made good at expense of Contractor and/or Surety who hereby agree to pay costs and charges therefore immediately on demand.

14.1.3 If, in the opinion of District, defective work creates a dangerous condition or requires immediate correction or attention to prevent further loss to District or to prevent interruption of operations of District, District will attempt to give the notice required above. If Contractor or Surety cannot be contacted or neither complies with District's request for correction within a reasonable time as determined by District, District may, notwithstanding the above provision, proceed to make any and all corrections and/or provide attentions the District believes are necessary. The costs of correction or attention shall be charged against Contractor and Surety of the guarantees provided in this Article or elsewhere in this Contract.

14.1.4 The above provisions do not in any way limit the guarantees on any items for which a longer guarantee is specified or on any items for which a manufacturer gives a guarantee for a longer period. Contractor shall furnish to District all appropriate guarantee or warranty certificates as indicated in the Specifications or upon request by District.

14.1.5 Nothing herein shall limit any other rights or remedies available to District.

14.2 Indemnity and Defense

14.2.1 To the furthest extent permitted by California law, the Contractor shall indemnify, keep and hold harmless the District, the Architect(s), and the Construction Manager(s), their respective consultants, separate contractors, board members, officers, representatives, , agents, and employees, in both individual and official capacities ("Indemnitees"), against all suits, claims, injury, damages, losses, and expenses ("Claims"), including but not limited to attorney's fees, caused by, arising out of, resulting from, or incidental to, in whole or in part, the performance of the Work under this Contract by the Contractor, its Subcontractors, vendors, or suppliers. However, the Contractor's indemnification and hold harmless obligation shall be reduced by the proportion of the Indemnitees' and/or Architect's liability to the extent the Claim(s) is/are caused by the sole negligence, active negligence, or

willful misconduct of the Indemnitees, and/or defects in design furnished by the Architect, as found by a court or arbitrator of competent jurisdiction. This indemnification and hold harmless obligation of the Contractor shall not be construed to negate, abridge, or otherwise reduce any right or obligation of indemnity that would otherwise exist or arise as to any Indemnitee or other person described herein. This indemnification and hold harmless obligation includes, but is not limited to, any failure or alleged failure by Contractor to comply with any provision of law, any failure or alleged failure to timely and properly fulfill all of its obligations under the Contract Documents in strict accordance with their terms, and without limitation, any failure or alleged failure of Contractor's obligations regarding any stop payment notice actions or liens, including Civil Wage and Penalty Assessments and/or Orders by the DIR.

14.2.2 To the furthest extent permitted by California law, Contractor shall also defend Indemnitees, at its own expense, including but not limited to attorneys' fees and costs, against all Claims caused by, arising out of, resulting from, or incidental to, in whole or in part, the performance of the Work under this Contract by the Contractor, its Subcontractors, vendors, or suppliers. However, the Contractor's defense obligation shall be reduced by the proportion of the Indemnitees' and/or Architect's liability to the extent caused by the sole negligence, active negligence, or willful misconduct of the Indemnitees, and/or defects in design furnished by the Architect, as found by a court or arbitrator of competent jurisdiction. The District shall have the right to accept or reject any legal representation that Contractor proposes to defend the Indemnitees. If any Indemnitee provides its own defense due to failure to timely respond to tender of defense, rejection of tender of defense, or conflict of interest of proposed counsel, Contractor shall reimburse such Indemnitee for any expenditures. Contractor's defense obligation shall not be construed to negate, abridge, or otherwise reduce any right or obligation of defense that would otherwise exist as to any Indemnitee or other person described herein. Contractor's defense obligation includes, but is not limited to, any failure or alleged failure by Contractor to comply with any provision of law, any failure or alleged failure to timely and properly fulfill all of its obligations under the Contract Documents in strict accordance with their terms, and without limitation, any failure or alleged failure of Contractor's obligations regarding any stop payment notice actions or liens, including Civil Wage and Penalty Assessments and/or Orders by the DIR. The Contractor shall give prompt notice to the District in the event of any Claim(s).

14.2.3 Without limitation of the provisions herein, if the Contractor's obligation to indemnify and hold harmless the Indemnitees or its obligation to defend Indemnitees as provided herein shall be determined to be void or unenforceable, in whole or in part, it is the intention of the parties that these circumstances shall not otherwise affect the validity or enforceability of the Contractor's agreement to indemnify, defend, and hold harmless the rest of the Indemnitees, as provided herein. Further, the Contractor shall be and remain fully liable on its agreements and obligations herein to the fullest extent permitted by law.

14.2.4 Pursuant to Public Contract Code section 9201, the District shall provide timely notification to Contractor of the receipt of any third-party Claim relating to this Contract. The District shall be entitled to recover its reasonable costs incurred in providing said notification.

14.2.5 In any and all Claims against any of the Indemnitees by any employee of the Contractor, any Subcontractor, anyone directly or indirectly employed by any of them or anyone for whose acts any of them may be liable, the Contractor's indemnification obligation herein shall not be limited in any way by any limitation on the amount or type of damages, compensation, or benefits payable by or for the Contractor or any Subcontractor under workers' compensation acts, disability benefit acts, or other employee benefit acts.

14.2.6 The District may retain so much of the moneys due the Contractor as shall be considered necessary, until disposition of any such Claims or until the District, Architect(s) and Construction Manager(s) have received written agreement from the Contractor that they will unconditionally defend the District, Architect(s) and Construction Manager(s), their respective officers, agents and employees, and pay any damages due by reason of settlement or judgment.

14.2.7 The Contractor's defense and indemnification obligations hereunder shall survive the completion of Work, the warranty/guarantee period, and the termination of the Contract.

15. TIME

15.1 Notice to Proceed

15.1.1 District may issue a Notice to Proceed within ninety (90) days from the date of the Notice of Award. Once Contractor has received the Notice to Proceed, Contractor shall complete the Work within the period of time indicated in the Contract Documents.

15.1.2 In the event that the District desires to postpone issuing the Notice to Proceed beyond ninety (90) days from the date of the Notice of Award, it is expressly understood that with reasonable notice to the Contractor, the District may postpone issuing the Notice to Proceed. It is further expressly understood by Contractor that Contractor shall not be entitled to any claim of additional compensation as a result of the postponement of the issuance of the Notice to Proceed.

15.1.3 If the Contractor believes that a postponement of issuance of the Notice to Proceed will cause a hardship to Contractor, Contractor may terminate the Contract. Contractor's termination due to a postponement shall be by written notice to District within ten (10) days after receipt by Contractor of District's notice of postponement. It is further understood by Contractor that in the event that Contractor terminates the Contract as a result of postponement by the District, the District shall only be obligated to pay Contractor for the Work that Contractor had performed at the time of notification of postponement. Should Contractor terminate the Contract as a result of a notice of postponement, District shall have the authority to award the Contract to the next lowest responsive responsible bidder.

15.2 Computation of Time / Adverse Weather

15.2.1 The Contractor will only be allowed a time extension for Adverse Weather conditions if requested by Contractor in compliance with the time extension request procedures and only if all of the following conditions are met:

15.2.1.1 The weather conditions constitute Adverse Weather, as defined herein and further specified in the Special Conditions;

15.2.1.2 Contractor can verify that the Adverse Weather caused delays in excess of five (5) hours of the indicated labor required to complete the scheduled tasks of Work on the day affected by the Adverse Weather;

15.2.1.3 The Contractor's crew is dismissed as a result of the Adverse Weather;

15.2.1.4 Said delay adversely affects the critical path in the Construction Schedule; and

15.2.1.5 Exceeds twelve (12) days of delay per year.

15.2.2 If the aforementioned conditions are met, a non-compensable day-for-day extension will only be allowed for those days in excess of those indicated in the Special Conditions.

15.2.3 The Contractor shall work seven (7) days per week, if necessary, irrespective of inclement weather, to maintain access and the Construction Schedule, and to protect the Work under construction from the effects of Adverse Weather, all at no further cost to the District.

15.2.4 The Contract Time has been determined with consideration given to the average climate weather conditions prevailing in the County in which the Project is located.

15.3 Hours of Work

15.3.1 Sufficient Forces

Contractor and Subcontractors shall continuously furnish sufficient and competent work forces with the required levels of familiarity with the Project and skill, training and experience to ensure the prosecution of the Work in accordance with the Construction Schedule.

15.3.2 Performance During Working Hours

Work shall be performed during regular working hours as permitted by the appropriate governmental agency except that in the event of an emergency, or when required to complete the Work in accordance with job progress, Work may be performed outside of regular working hours with the advance written consent of the District and approval of any required governmental agencies.

15.3.3 No Work during State Testing

Contractor shall, at no additional cost to the District and at the District's request, coordinate its Work to not disturb District students including, without limitation, not performing any Work when students at the Site are taking State or Federally-required tests. The District or District's Representative will provide Contractor with a schedule of test dates concurrent with the District's issuance of the Notice to Proceed, or as soon as test dates are made available to the District.

15.4 Progress and Completion

15.4.1 Time of the Essence

Time limits stated in the Contract Documents are of the essence to the Contract. By executing the Agreement, the Contractor confirms that the Contract Time is a reasonable period for performing the Work.

15.4.2 No Commencement Without Insurance or Bonds

The Contractor shall not commence operations on the Project or elsewhere prior to the effective date of insurance and bonds. The date of commencement of the Work shall not be changed by the effective date of such insurance or bonds. If Contractor commences Work without insurance and bonds, all Work is performed at Contractor's peril and shall not be compensable until and unless Contractor secures bonds and insurance pursuant to the terms of the Contract Documents and subject to District claim for damages.

15.5 Schedule

Contractor shall provide to District, Construction Manager, and Architect a schedule in conformance with the Contract Documents and as required in the Notice to Proceed and the Contractor's Submittals and Schedules section of these General Conditions.

15.6 Expeditious Completion

The Contractor shall proceed expeditiously with adequate forces and shall achieve Completion within the Contract Time.

16. EXTENSIONS OF TIME – LIQUIDATED DAMAGES

16.1 Liquidated Damages

Contractor and District hereby agree that the exact amount of damages for failure to complete the Work within the time specified is extremely difficult or impossible to determine. If the Work is not completed within the time specified in the Contract Documents, it is understood that the District will suffer damage. It being impractical and unfeasible to determine the amount of actual damage, it is agreed the Contractor shall pay to District as fixed and liquidated damages, and not as a penalty, the amount set forth in the Agreement for each calendar day of delay in completion. Contractor and its Surety shall be liable for the amount thereof pursuant to Government Code section 53069.85.

16.2 Excusable Delay

16.2.1 Contractor shall not be charged for liquidated damages because of any delays in completion of Work which are not the fault of Contractor or its Subcontractors, including acts of God as defined in Public Contract Code section 7105, acts of enemy, epidemics, and quarantine restrictions. Contractor shall, within five (5) calendar days of beginning of any delay, notify District in writing of causes of delay including documentation and facts explaining the delay and the direct correlation between the cause and effect. District shall review the facts and extent of any delay and shall grant extension(s) of time for completing Work when, in its

judgment, the findings of fact justify an extension. Extension(s) of time shall apply only to that portion of Work affected by delay, and shall not apply to other portions of Work not so affected. An extension of time may only be granted if Contractor has timely submitted the Construction Schedule as required herein.

16.2.2 Contractor shall notify the District pursuant to the claims provisions in these General Conditions of any anticipated delay and its cause. Following submission of a claim, the District may determine whether the delay is to be considered avoidable or unavoidable, how long it continues, and to what extent the prosecution and completion of the Work might be delayed thereby.

16.2.3 In the event the Contractor requests an extension of Contract Time for unavoidable delay, such request shall be submitted in accordance with the provisions in the Contract Documents governing changes in Work. When requesting time, requests must be submitted with full justification and documentation. If the Contractor fails to submit justification, it waives its right to a time extension at a later date. Such justification must be based on the official Construction Schedule as updated at the time of occurrence of the delay or execution of Work related to any changes to the Scope of Work. Any claim for delay must include the following information as support, without limitation:

16.2.3.1 The duration of the activity relating to the changes in the Work and the resources (manpower, equipment, material, etc.) required to perform the activities within the stated duration.

16.2.3.2 Specific logical ties to the Contract Schedule for the proposed changes and/or delay showing the activity/activities in the Construction Schedule that are affected by the change and/or delay. In particular, Contractor must show an actual impact to the schedule, after making a good faith effort to mitigate the delay by rescheduling the work, by providing an analysis of the schedule ("Schedule Analysis"). Such Schedule Analysis shall describe in detail the cause and effect of the delay and the impact on the critical dates in the Project schedule. (A portion of any delay of seven (7) days or more must be provided.)

16.2.3.3 A recovery schedule must be submitted within twenty (20) calendar days of written notification to the District of causes of delay.

16.3 No Additional Compensation for Delays Within Contractor's Control

16.3.1 Contractor is aware that governmental agencies, including, without limitation, the Division of the State Architect, the Department of General Services, gas companies, electrical utility companies, water districts, and other agencies may have to approve Contractor-prepared drawings or approve a proposed installation. Accordingly, Contractor shall include in its bid, time for possible review of its drawings and for reasonable delays and damages that may be caused by such agencies. Thus, Contractor is not entitled to make a claim for damages or delays arising from the review of Contractor's drawings.

16.3.2 Contractor shall only be entitled to compensation for delay when all of the following conditions are met:

16.3.2.1 The District is responsible for the delay;

16.3.2.2 The delay is unreasonable under the circumstances involved;

16.3.2.3 The delay was not within the contemplation of the District and Contractor;

16.3.2.4 The delay could not have been avoided or mitigated by Contractor's reasonable diligence; and

16.3.2.5 Contractor timely complies with the claims procedure of the Contract Documents.

16.4 Float or Slack in the Schedule

Float or slack is the amount of time between the early start date and the late start date, or the early finish date and the late finish date, of any of the activities in the schedule. Float or slack is not for the exclusive use of or benefit of either the District or the Contractor, but its use shall be determined solely by the District.

17. CHANGES IN THE WORK

17.1 No Changes Without Authorization

17.1.1 There shall be no change whatsoever in the Drawings, Specifications, or in the Work without an executed Change Order or a written Construction Change Directive authorized by the District as herein provided. District shall not be liable for the cost of any extra work or any substitutions, changes, additions, omissions, or deviations from the Drawings and Specifications unless the District's governing board has authorized the same and the cost thereof has been approved in writing by Change Order or Construction Change Directive in advance of the changed Work being performed. No extension of time for performance of the Work shall be allowed hereunder unless claim for such extension is made at the time changes in the Work are ordered, and such time duly adjusted and approved in writing in the Change Order or Construction Change Directive. Contractor shall be responsible for any costs incurred by the District for professional services and DSA fees and/or delay to the Project Schedule, if any, for DSA to review any request for changes to the DSA approved plans and specifications for the convenience of the Contractor and/or to accommodate the Contractor's means and methods. The provisions of the Contract Documents shall apply to all such changes, additions, and omissions with the same effect as if originally embodied in the Drawings and Specifications.

17.1.2 Contractor shall perform immediately all work that has been authorized by a fully executed Change Order or Construction Change Directive. Contractor shall be fully responsible for any and all delays and/or expenses caused by Contractor's failure to expeditiously perform this Work.

17.1.3 Should any Change Order result in an increase in the Contract Price or extend the Contract Time, the cost of or length of extension in that Change Order shall be agreed to, in writing, by the District in advance of the Work by Contractor, and shall be subject to the monetary limitations set forth in Public Contract Code section 20118.4. In the event that Contractor proceeds with any change in Work without a Change Order executed by the District or Construction Change Directive, Contractor waives any claim of additional compensation or time for that additional work. Under no circumstances shall Contractor be entitled to any claim of additional

compensation or time not expressly requested by Contractor in a Proposed Change Order or approved by District in an executed Change Order.

17.1.4 Contractor understands, acknowledges, and agrees that the reason for District authorization is so that District may have an opportunity to analyze the Work and decide whether the District shall proceed with the Change Order or alter the Project so that a change in Work becomes unnecessary.

17.2 Architect Authority

The Architect will have authority to order minor changes in the Work not involving any adjustment in the Contract Price, or an extension of the Contract Time, or a change that is inconsistent with the intent of the Contract Documents. These changes shall be effected by written Change Order, Construction Change Directive, by Architect's response(s) to RFI(s), or by Architect's Supplemental Instructions ("ASI").

17.3 Change Orders

17.3.1 A Change Order is a written instrument prepared and issued by the District and/or the Architect and signed by the District (as authorized by the District's Governing Board), the Contractor, the Architect, and approved by the Project Inspector (if necessary) and DSA (if necessary), stating their agreement regarding all of the following:

17.3.1.1 A description of a change in the Work;

17.3.1.2 The amount of the adjustment in the Contract Price, if any; and

17.3.1.3 The extent of the adjustment in the Contract Time, if any.

17.4 Construction Change Directives

17.4.1 A Construction Change Directive is a written order prepared and issued by the District, the Construction Manager, and/or the Architect and signed by the District and the Architect, directing a change in the Work. The District may, as provided by law, by Construction Change Directive and without invalidating the Contract, order changes in the Work consisting of additions, deletions, or other revisions. The adjustment to the Contract Price or Time, if any, is subject to the provisions of this section regarding Changes in the Work. If all or a portion of the Project is being funded by funds requiring approval by the State Allocation Board ("SAB"), these revisions may be subject to compensation once approval of same is received and funded by the SAB, and funds are released by the Office of Public School Construction ("OPSC"). Any dispute as to the adjustment in the Contract Price, if any, of the Construction Change Directive or timing of payment shall be resolved pursuant to the Payment and Claims and Disputes provisions herein.

17.4.2 The District may issue a Construction Change Directive in the absence of agreement on the terms of a Change Order.

17.5 Force Account Directives

17.5.1 When work, for which a definite price has not been agreed upon in advance, is to be paid for on a force account basis, all direct costs necessarily

incurred and paid by the Contractor for labor, material, and equipment used in the performance of that Work, shall be subject to the approval of the District and compensation will be determined as set forth herein.

17.5.2 The District will issue a Force Account Directive to proceed with the Work on a force account basis, and a not-to-exceed budget will be established by the District.

17.5.3 All requirements regarding direct cost for labor, labor burden, material, equipment, and markups on direct costs for overhead and profit described in this section shall apply to Force Account Directives. However, the District will only pay for actual costs verified in the field by the District or its authorized representative(s) on a daily basis.

17.5.4 The Contractor shall be responsible for all cost related to the administration of Force Account Directive. The markup for overhead and profit for Contractor modifications shall be full compensation to the Contractor to administer Force Account Directive, and Contractor shall not be entitled to separately recover additional amounts for overhead and/or profit.

17.5.5 The Contractor shall notify the District or its authorized representative(s) at least twenty-four (24) hours prior to proceeding with any of the force account work. Furthermore, the Contractor shall notify the District when it has consumed eighty percent (80%) of the budget, and shall not exceed the budget unless specifically authorized in writing by the District. The Contractor will not be compensated for force account work in the event that the Contractor fails to timely notify the District regarding the commencement of force account work, or exceeding the force account budget.

17.5.6 The Contractor shall diligently proceed with the work, and on a daily basis, submit a daily force account report on a form supplied by the District no later than 5:00 p.m. each day. The report shall contain a detailed itemization of the daily labor, material, and equipment used on the force account work only. The names of the individuals performing the force account work shall be included on the daily force account reports. The type and model of equipment shall be identified and listed. The District will review the information contained in the reports, and sign the reports no later than the next work day, and return a copy of the report to the Contractor for their records. The District will not sign, nor will the Contractor receive compensation for work the District cannot verify. The Contractor will provide a weekly force account summary indicating the status of each Force Account Directive in terms of percent complete of the not-to-exceed budget and the estimated percent complete of the work.

17.5.7 In the event the Contractor and the District reach a written agreement on a set cost for the work while the work is proceeding based on a Force Account Directive, the Contractor's signed daily force account reports shall be discontinued and all previously signed reports shall be invalid.

17.6 Price Request

17.6.1 Definition of Price Request

A Price Request ("PR") is a written request prepared by the Architect requesting the Contractor to submit to the District and the Architect an estimate of the effect of a proposed change in the Work on the Contract Price and the Contract Time.

17.6.2 Scope of Price Request

A Price Request shall contain adequate information, including any necessary Drawings and Specifications, to enable Contractor to provide the cost breakdowns required herein. The Contractor shall not be entitled to any additional compensation for preparing a response to a Price Request, whether ultimately accepted or not.

17.7 Proposed Change Order

17.7.1 Definition of Proposed Change Order

A Proposed Change Order ("PCO") is a written request prepared by the Contractor requesting that the District and the Architect issue a Change Order based upon a proposed change to the Work.

17.7.2 Changes in Contract Price

A PCO shall include breakdowns and backup documentation pursuant to the revisions herein and sufficient, in the District's judgment, to validate any change in Contract Price. In no case shall Contractor or any of its Subcontractors be permitted to reserve rights for additional compensation for Change Order Work.

17.7.3 Changes in Time

A PCO shall also include any changes in time required to complete the Project. Any additional time requested shall not be the number of days to make the proposed change, but must be based upon the impact to the Construction Schedule as defined in the Contract Documents. The Contractor shall justify the proposed change in time by submittal of a schedule analysis that accurately shows the impact of the change on the critical path of the Construction Schedule ("Time Impact Analysis"). If Contractor fails to request a time extension in a PCO, including the Time Impact Analysis, then the Contractor is thereafter precluded from requesting, and waives any right to request, additional time and/or claim a delay. In no case shall Contractor or any of its Subcontractors be permitted to reserve rights for additional time for Change Order Work. A PCO that leaves the amount of time requested blank, or states that such time requested is "to be determined", is not permitted and shall also constitute a waiver of any right to request additional time and/or claim a delay.

17.7.4 Unknown and/or Unforeseen Conditions

If there is an Allowance, then Contractor must submit a Request for Allowance Expenditure Directive, including supporting documentation as described below, to receive authorization for the release of funds from the Allowance. If cost of the unforeseen condition(s) exceed the Allowance, Contractor must submit a PCO requesting an increase in Contract Price and/or Contract Time that is based at least

partially on Contractor's assertion that Contractor has encountered unknown and/or unforeseen condition(s) on the Project, then Contractor shall base the PCO on provable information that, beyond a reasonable doubt and to the District's satisfaction, demonstrates that the unknown and/or unforeseen condition(s) were actually unknown and/or unforeseen and that the condition(s) were reasonably unknown and/or unforeseen. If not, the District shall deny the PCO as unsubstantiated, and the Contractor shall complete the Project without any increase in Contract Price and/or Contract Time based on that PCO.

17.7.5 Time to Submit Proposed Change Order

Contractor shall submit its PCO within five (5) working days of the date Contractor discovers, or reasonably should have discovered, the circumstances giving rise to the PCO, unless additional time to submit a PCO is granted in writing by the District. Time is of the essence in Contractor's submission of PCOs so that the District can promptly investigate the basis for the PCO. Accordingly, if Contractor fails to submit its PCO within this timeframe, Contractor waives, releases, and discharges any right to assert or claim any entitlement to an adjustment of the Contract Price and/or Time based on circumstances giving rise to the PCO.

17.7.6 Proposed Change Order Certification

In submitting a PCO, Contractor certifies and affirms that the cost and/or time request is submitted in good faith, that the cost and/or time request is accurate and in accordance with the provisions of the Contract Documents, and the Contractor submits the cost and/or request for extension of time recognizing the significant civil penalties and treble damages which follow from making a false claim or presenting a false claim under Government Code section 12650 et seq.

[THE REMAINDER OF THIS PAGE LEFT BLANK INTENTIONALLY]

17.8 Format for Proposed Change Order

17.8.1 The following format shall be used as applicable by the District and the Contractor (e.g. Change Orders, PCO's) to communicate proposed additions and deductions to the Contract, supported by attached documentation. Any spaces left blank will be deemed no change to cost or time.

	WORK PERFORMED OTHER THAN BY CONTRACTOR	**ADD**	**DEDUCT**
(a)	**Material** (attach suppliers' invoice or itemized quantity and unit cost plus sales tax)		
(b)	**Add Labor** (attach itemized hours and rates, fully encumbered)		
(c)	**Add Equipment** (attach suppliers' invoice)		
(d)	**Subtotal**		
(e)	**Add overhead and profit for any and all tiers of Subcontractor**, the total not to exceed ten percent (10%) of Item (d)		
(f)	**Subtotal**		
(g)	**Add Overhead and Profit for Contractor**, not to exceed five percent (5%) of Item (f)		
(h)	**Subtotal**		
(i)	**Add Bond and Insurance**, not to exceed one and a half percent (1.5%) of Item (h)		
(j)	**TOTAL**		
(k)	**Time** (zero unless indicated; "TBD" not permitted)	**_____ Calendar Days**	

	WORK PERFORMED BY CONTRACTOR	**ADD**	**DEDUCT**
(l)	**Material** (attach itemized quantity and unit cost plus sales tax)		
(m)	**Add Labor** (attach itemized hours and rates, fully encumbered)		
(n)	**Add Equipment** (attach suppliers' invoice)		
(o)	**Subtotal**		
(p)	**Add Overhead and Profit for Contractor**, not to exceed fifteen percent (15%) of Item (d)		
(q)	**Subtotal**		
(r)	**Add Bond and Insurance**, not to exceed one and a half percent (1.5%) of Item (f)		
(s)	**TOTAL**		
(t)	**Time** (zero unless indicated; "TBD" not permitted)	**_____ Calendar Days**	

17.8.2 Labor. Contractor shall be compensated for the costs of labor actually and directly utilized in the performance of the Work. Such labor costs shall be limited to field labor for which there is a prevailing wage rate classification. Wage rates for labor shall not exceed the prevailing wage rates in the locality of the Site and shall be in the labor classification(s) necessary for the performance of the Work. Labor costs shall exclude costs incurred by the Contractor in preparing estimate(s) of

the costs of the change in the Work, in the maintenance of records relating to the costs of the change in the Work, coordination and assembly of materials and information relating to the change in the Work or performance thereof, or the supervision and other overhead and general conditions costs associated with the change in the Work or performance thereof, including but not limited to the cost for the job superintendent.

17.8.3 Materials. Contractor shall be compensated for the costs of materials necessarily and actually used or consumed in connection with the performance of the change in the Work. Costs of materials may include reasonable costs of transportation from a source closest to the Site of the Work and delivery to the Site. If discounts by material suppliers are available for materials necessarily used in the performance of the change in the Work, they shall be credited to the District. If materials necessarily used in the performance of the change in the Work are obtained from a supplier or source owned in whole or in part by the Contractor, compensation therefor shall not exceed the current wholesale price for such materials. If, in the reasonable opinion of the District, the costs asserted by the Contractor for materials in connection with any change in the Work are excessive, or if the Contractor fails to provide satisfactory evidence of the actual costs of such materials from its supplier or vendor of the same, the costs of such materials and the District's obligation to pay for the same shall be limited to the then lowest wholesale price at which similar materials are available in the quantities required to perform the change in the Work. The District may elect to furnish materials for the change in the Work, in which event the Contractor shall not be compensated for the costs of furnishing such materials or any mark-up thereon.

17.8.4 Equipment. As a precondition to the District's duty to pay for Equipment rental or loading and transportation, Contractor shall provide satisfactory evidence of the actual costs of Equipment from the supplier, vendor or rental agency of same. Contractor shall be compensated for the actual cost of the necessary and direct use of Equipment in the performance of the change in the Work. Use of such Equipment in the performance of the change in the Work shall be compensated in increments of fifteen (15) minutes. Rental time for Equipment moved by its own power shall include time required to move such Equipment to the site of the Work from the nearest available rental source of the same. If Equipment is not moved to the Site by its own power, Contractor will be compensated for the loading and transportation costs in lieu of rental time. The foregoing notwithstanding, neither moving time or loading and transportation time shall be allowed if the Equipment is used for performance of any portion of the Work other than the change in the Work. Unless prior approval in writing is obtained by the Contractor from the Architect, the Project Inspector and the District, no costs or compensation shall be allowed for time while Construction Equipment is inoperative, idle or on standby, for any reason. Contractor shall not be entitled to an allowance or any other compensation for Equipment or tools used in the performance of change in the Work where such Equipment or tools have a replacement value of $500.00 or less. Equipment costs claimed by the Contractor in connection with the performance of any Work shall not exceed rental rates established by distributors or construction equipment rental agencies in the locality of the Site; any costs asserted which exceed such rental rates shall not be allowed or paid. Unless otherwise specifically approved in writing by the Architect, the Project Inspector and the District, the allowable rate for the use of Equipment in connection with the Work shall constitute full compensation to the Contractor for the cost of rental, fuel, power, oil, lubrication, supplies, necessary attachments, repairs or maintenance of any kind, depreciation, storage, insurance,

labor (exclusive of labor costs of the Equipment operator), and any and all other costs incurred by the Contractor incidental to the use of such Equipment.

17.8.5 Overhead and Profit. The phrase "Overhead and Profit" shall include field and office supervisors and assistants, watchperson, use of small tools, consumable, insurance other than construction bonds and insurance required herein, and general field and home office expenses.

17.9 Change Order Certification

17.9.1 All Change Orders and PCOs must include the following certification by the Contractor:

17.9.1.1 The undersigned Contractor approves the foregoing as to the changes, if any, to the Contract Price specified for each item, and as to the extension of time allowed, if any, for completion of the entire Work as stated herein, and agrees to furnish all labor, materials, and service, and perform all work necessary to complete any additional work specified for the consideration stated herein. Submission of sums which have no basis in fact or which Contractor knows are false are at the sole risk of Contractor and may be a violation of the False Claims Act set forth under Government Code section 12650 et seq. It is understood that the changes herein to the Contract shall only be effective when approved by the governing board of the District.

17.9.1.2 It is expressly understood that the value of the extra Work or changes expressly includes any and all of the Contractor's costs and expenses, direct and indirect, resulting from additional time required on the Project or resulting from delay to the Project. Contractor is not entitled to separately recover amounts for overhead or other indirect costs. Any costs, expenses, damages, or time extensions not included are deemed waived.

17.10 Determination of Change Order Cost

17.10.1 The amount of the increase or decrease in the Contract Price from a Change Order, if any, shall be determined in one or more of the following ways as applicable to a specific situation and at the District's discretion:

17.10.1.1 District acceptance of a PCO;

17.10.1.2 By unit prices contained in Contractor's original bid;

17.10.1.3 By agreement between District and Contractor.

17.11 Deductive Change Orders

All deductive Change Order(s) must be prepared pursuant to the provisions herein. Where a portion of the Work is deleted from the Contract, the reasonable value of the deducted work less the value of work performed shall be considered the appropriate deduction. The value submitted on the Schedule of Values shall be used to calculate the credit amount unless the bid documentation is being held in escrow as part of the Contract Documents. Unit Prices, if any, may be used in District's discretion in calculating reasonable value. If Contractor offers a proposed amount for a deductive Change Order(s), Contractor shall include a minimum of five percent (5%) total profit

and overhead to be deducted with the amount of the work of the Change Order(s). If Subcontractor work is involved, Subcontractors shall also include a minimum of five percent (5%) profit and overhead to be deducted with the amount of its deducted work. Any deviation from this provision shall not be allowed.

17.12 Addition or Deletion of Alternate Bid Item(s)

If the Bid Form and Proposal includes proposal(s) for Alternate Bid Item(s), during Contractor's performance of the Work, the District may elect to add or delete any such Alternate Bid Item(s) if not included in the Contract at the time of award. If the District elects to add or delete Alternate Bid Item(s) after Contract award, the cost or credit for such Alternate Bid Item(s) shall be as set forth in the Bid Form and Proposal unless the parties agree to a different price and the Contract Time shall be adjusted by the number of days allocated in the Contract Documents. If days are not allocated in the Contract Documents, the Contract Time shall be equitably adjusted.

17.13 Discounts, Rebates, and Refunds

For purposes of determining the cost, if any, of any change, addition, or omission to the Work hereunder, all trade discounts, rebates, refunds, and all returns from the sale of surplus materials and equipment shall accrue and be credited to the Contractor, and the Contractor shall make provisions so that such discounts, rebates, refunds, and returns may be secured, and the amount thereof shall be allowed as a reduction of the Contractor's cost in determining the actual cost of construction for purposes of any change, addition, or omission in the Work as provided herein.

17.14 Accounting Records

With respect to portions of the Work performed by Change Orders and Construction Change Directives, the Contractor shall keep and maintain cost-accounting records satisfactory to the District, including, without limitation, Job Cost Reports as provided in these General Conditions, which shall be available to the District on the same terms as any other books and records the Contractor is required to maintain under the Contract Documents. Such records shall include without limitation hourly records for Labor and Equipment and itemized records of materials and Equipment used that day in connection with the performance of any Work. All records maintained hereunder shall be subject to inspection, review and/or reproduction by the District, the Architect or the Project Inspector upon request. In the event that the Contractor fails or refuses, for any reason, to maintain or make available for inspection, review and/or reproduction such records, the District's reasonable good faith determination of the extent of adjustment to the Contract Price shall be final, conclusive, dispositive and binding upon Contractor.

17.15 Notice Required

If the Contractor desires to make a claim for an increase in the Contract Price, or any extension in the Contract Time for completion, it shall notify the District pursuant to the provisions herein, including the Article on Claims and Disputes. No claim shall be considered unless made in accordance with this subparagraph. Contractor shall proceed to execute the Work even though the adjustment may not have been agreed upon. Any change in the Contract Price or extension of the Contract Time resulting from such claim shall be authorized by a Change Order.

17.16 Applicability to Subcontractors

Any requirements under this Article shall be equally applicable to Change Orders or Construction Change Directives issued to Subcontractors by the Contractor to the extent as required by the Contract Documents.

17.17 Alteration to Change Order Language

Contractor shall not alter Change Orders or reserve time in Change Orders. Change Orders altered in violation of this provision, if in conflict with the terms set forth herein, shall be construed in accordance with the terms set forth herein. Contractor shall execute finalized Change Orders and proceed under the provisions herein with proper notice.

17.18 Failure of Contractor to Execute Change Order

Contractor shall be in default of the Contract if Contractor fails to execute a Change Order when the Contractor agrees with the addition and/or deletion of the Work in that Change Order.

18. REQUEST FOR INFORMATION

18.1 Any Request for Information shall reference all applicable Contract Document(s), including Specification section(s), detail(s), page number(s), drawing number(s), and sheet number(s), etc. The Contractor shall make suggestions and interpretations of the issue raised by each Request for Information. A Request for Information cannot modify the Contract Price, Contract Time, or the Contract Documents. Upon request by the District, Contractor shall provide an electronic copy of the Request for Information in addition to the hard copy.

18.2 The Contractor shall be responsible for any costs incurred for professional services that District may deduct from any amounts owing to the Contractor, if a Request for Information requests an interpretation or decision of a matter where the information sought is equally available to the party making the request. District, at its sole discretion, shall deduct from and/or invoice Contractor for all the professional services arising herein.

19. PAYMENTS

19.1 Contract Price

The Contract Price is stated in the Agreement and, including authorized adjustments, is the total amount payable by the District to the Contractor for performance of the Work under the Contract Documents.

19.2 Applications for Progress Payments

19.2.1 Procedure for Applications for Progress Payments

19.2.1.1 Application for Progress Payment

19.2.1.1.1 Not before the fifth (5th) day of each calendar month during the progress of the Work, Contractor shall submit to the District and the

Architect an itemized Application for Payment for operations completed in accordance with the Schedule of Values. Such application shall be notarized, if required, and supported by the following or each portion thereof unless waived by the District in writing:

19.2.1.1.1.1 The amount paid to the date of the Application to the Contractor, to all its Subcontractors, and all others furnishing labor, material, or equipment for its Contract;

19.2.1.1.1.2 The amount being requested under the Application for Payment by the Contractor on its own behalf and separately stating the amount requested on behalf of each of the Subcontractors and all others furnishing labor, material, and equipment under the Contract;

19.2.1.1.1.3 The balance that will be due to each of such entities after said payment is made;

19.2.1.1.1.4 A certification that the As-Built Drawings and annotated Specifications are current;

19.2.1.1.1.5 Itemized breakdown of work done for the purpose of requesting partial payment;

19.2.1.1.1.6 An updated and acceptable construction schedule in conformance with the provisions herein;

19.2.1.1.1.7 The additions to and subtractions from the Contract Price and Contract Time;

19.2.1.1.1.8 A total of the retentions held;

19.2.1.1.1.9 Material invoices, evidence of equipment purchases, rentals, and other support and details of cost as the District may require from time to time;

19.2.1.1.1.10 The percentage of completion of the Contractor's Work by line item;

19.2.1.1.1.11 Schedule of Values updated from the preceding Application for Payment;

19.2.1.1.1.12 A duly completed and executed conditional waiver and release upon progress payment compliant with Civil Code section 8132 from the Contractor and each subcontractor of any tier and supplier to be paid from the current progress payment;

19.2.1.1.1.13 A duly completed and executed unconditional waiver and release upon progress payment compliant with Civil Code section 8134 from the Contractor and each subcontractor of any tier and supplier that was paid from the previous progress payment(s); and

19.2.1.1.1.14 A certification by the Contractor of the following:

The Contractor warrants title to all Work performed as of the date of this payment application has been completed in accordance with the Contract Documents for the Project. The Contractor further warrants that all amounts have been paid for work which previous Certificates for Payment were issued and payments received and all Work performed as of the date of this payment application is free and clear of liens, claims, security interests, or encumbrances in favor of the Contractor, Subcontractors, material and equipment suppliers, workers, or other persons or entities making a claim by reason of having provided labor, materials, and equipment relating to the Work, except those of which the District has been informed. Submission of sums which have no basis in fact or which Contractor knows are false are at the sole risk of Contractor and may be a violation of the False Claims Act set forth under Government Code section 12650 et seq.

19.2.1.1.1.15 The Contractor shall be subject to the False Claims Act set forth in Government Code section 12650 et seq. for information provided with any Application for Progress Payment.

19.2.1.1.1.16 All remaining certified payroll records ("CPR(s)") for each journeyman, apprentice, worker, or other employee employed by the Contractor and/or each Subcontractor in connection with the Work for the period of the Application for Payment. As indicated herein, the District shall not make any payment to Contractor until:

19.2.1.1.1.16.1 Contractor and/or its Subcontractor(s) provide electronic CPRs weekly for all weeks any journeyman, apprentice, worker or other employee was employed in connection with the Work directly to the DIR, or within ten (10) days of any request by the District or the DIR, and

19.2.1.1.1.16.2 Any delay in Contractor and/or its Subcontractor(s) providing CPRs in a timely manner may directly delay the Contractor's payment.

19.2.1.1.2 Applications received after June 20th will not be paid until the second week of July and applications received after December 12th will not be paid until the first week of January.

19.2.2 <u>Prerequisites for Progress Payments</u>

19.2.2.1 <u>First Payment Request</u>: The following items, if applicable, must be completed before the District will accept and/or process the Contractor's first payment request:

19.2.2.1.1 Installation of the Project sign;

19.2.2.1.2 Installation of field office;

19.2.2.1.3 Installation of temporary facilities and fencing;

19.2.2.1.4 Schedule of Values;

19.2.2.1.5 Contractor's Construction Schedule;

19.2.2.1.6 Schedule of unit prices, if applicable;

19.2.2.1.7 Submittal Schedule;

19.2.2.1.8 Receipt by Architect of all submittals due as of the date of the payment application;

19.2.2.1.9 Copies of necessary permits;

19.2.2.1.10 Copies of authorizations and licenses from governing authorities;

19.2.2.1.11 Initial progress report;

19.2.2.1.12 Surveyor qualifications;

19.2.2.1.13 Written acceptance of District's survey of rough grading, if applicable;

19.2.2.1.14 List of all Subcontractors, with names, license numbers, telephone numbers, and Scope of Work;

19.2.2.1.15 All bonds and insurance endorsements; and

19.2.2.1.16 Resumes of Contractor's project manager, and if applicable, job site secretary, record documents recorder, and job site superintendent.

19.2.2.2 Second Payment Request: The District will not process the second payment request until and unless all submittals and Shop Drawings have been accepted for review by the Architect.

19.2.2.3 No Waiver of Criteria: Any payments made to Contractor where criteria set forth herein have not been met shall not constitute a waiver of said criteria by District. Instead, such payment shall be construed as a good faith effort by District to resolve differences so Contractor may pay its Subcontractors and suppliers. Contractor agrees that failure to submit such items may constitute a breach of contract by Contractor and may subject Contractor to termination.

19.3 Progress Payments

19.3.1 District's Approval of Application for Payment

19.3.1.1 Upon receipt of an Application for Payment, The District shall act in accordance with both of the following:

19.3.1.1.1 Each Application for Payment shall be reviewed by the District as soon as practicable after receipt for the purpose of determining that the Application for Payment is a proper Application for Payment.

19.3.1.1.2 Any Application for Payment determined not to be a proper Application for Payment suitable for payment shall be returned to the Contractor as soon as practicable, but not later than seven (7) days, after receipt. An Application for Payment returned pursuant to this paragraph shall be accompanied by a document setting forth in writing the reasons why the Application for Payment is not proper. The number of days available to the District to make a payment without incurring interest pursuant to this section shall be reduced by the number of days by which the District exceeds this seven-day return requirement.

19.3.1.1.3 An Application for Payment shall be considered properly executed if funds are available for payment of the Application for Payment, and payment is not delayed due to an audit inquiry by the financial officer of the District.

19.3.1.2 The District's review of the Contractor's Application for Payment will be based on the District's and the Architect's observations at the Site and the data comprising the Application for Payment that the Work has progressed to the point indicated and that, to the best of the District's and the Architect's knowledge, information, and belief, the quality of the Work is in accordance with the Contract Documents. The foregoing representations are subject to:

19.3.1.2.1 Observation of the Work for general conformance with the Contract Documents,

19.3.1.2.2 Results of subsequent tests and inspections,

19.3.1.2.3 Minor deviations from the Contract Documents correctable prior to completion, and

19.3.1.2.4 Specific qualifications expressed by the Architect.

19.3.1.3 District's approval of the certified Application for Payment shall be based on Contractor complying with all requirements for a fully complete and valid certified Application for Payment.

19.3.2 Payments to Contractor

19.3.2.1 Within thirty (30) days after approval of the Application for Payment, Contractor shall be paid a sum equal to ninety-five percent (95%) of the value of the Work performed (as verified by Architect and Inspector and certified by Contractor) up to the last day of the previous month, less the aggregate of previous payments and amount to be withheld. The value of the Work completed shall be Contractor's best estimate. No inaccuracy or error in said estimate shall operate to release the Contractor, or any Surety upon any bond, from damages arising from such Work, or from the District's right to enforce each and every provision of this Contract, and the District shall have the right subsequently to correct any error made in any estimate for payment.

19.3.2.2 The Contractor shall not be entitled to have any payment requests processed, or be entitled to have any payment made for Work performed, so long as any lawful or proper direction given by the District concerning the Work, or any portion thereof, remains incomplete.

19.3.2.3 If the District fails to make any progress payment within thirty (30) days after receipt of an undisputed and properly submitted Application for Payment from the Contractor, the District shall pay interest to the Contractor equivalent to the legal rate set forth in subdivision (a) of Section 685.010 of the Code of Civil Procedure.

19.3.3 No Waiver

No payment by District hereunder shall be interpreted so as to imply that District has inspected, approved, or accepted any part of the Work. Notwithstanding any payment, the District may enforce each and every provision of this Contract. The District may correct or require correction of any error subsequent to any payment.

19.4 Decisions to Withhold Payment

19.4.1 Reasons to Withhold Payment

The District may withhold payment in whole, or in part, to the extent reasonably necessary to protect the District if, in the District's opinion, the representations to the District required herein cannot be made. The District may withhold payment, in whole, or in part, to such extent as may be necessary to protect the District from loss because of, but not limited to any of the following:

19.4.1.1 Defective Work not remedied within **FORTY-EIGHT (48)** hours of written notice to Contractor.

19.4.1.2 Stop Payment Notices or other liens served upon the District as a result of the Contract. Contractor agrees that the District may withhold up to 125% of the amount claimed in the Stop Payment Notice to answer the claim and to provide for the District's reasonable cost of any litigation pursuant to the stop payment notice.

19.4.1.3 Liquidated damages assessed against the Contractor.

19.4.1.4 The cost of completion of the Contract if there exists a reasonable doubt that the Work can be completed for the unpaid balance of the Contract Price or by the completion date.

19.4.1.5 Damage to the District or other contractor(s).

19.4.1.6 Unsatisfactory prosecution of the Work by the Contractor.

19.4.1.7 Failure to store and properly secure materials.

19.4.1.8 Failure of the Contractor to submit, on a timely basis, proper, sufficient, and acceptable documentation required by the Contract Documents, including, without limitation, a Construction Schedule, Schedule of Submittals, Schedule of Values, Monthly Progress Schedules, Shop Drawings, Product Data and samples, Proposed product lists, executed Change Orders, and/or verified reports.

19.4.1.9 Failure of the Contractor to maintain As-Built Drawings.

19.4.1.10 Erroneous estimates by the Contractor of the value of the Work performed, or other false statements in an Application for Payment.

19.4.1.11 Unauthorized deviations from the Contract Documents.

19.4.1.12 Failure of the Contractor to prosecute the Work in a timely manner in compliance with the Construction Schedule, established progress schedules, and/or completion dates.

19.4.1.13 Failure to provide acceptable electronic certified payroll records, as required by the Labor Code, by these Contract Documents, or by written request; for each journeyman, apprentice, worker, or other employee employed by the Contractor and/or by each Subcontractor in connection with the Work for the period of the Application for Payment or if payroll records are delinquent or inadequate.

19.4.1.14 Failure to properly pay prevailing wages as required in Labor Code section 1720 et seq., failure to comply with any other Labor Code requirements, and/or failure to comply with labor compliance monitoring and enforcement by the DIR.

19.4.1.15 Allowing an unregistered subcontractor, as described in Labor Code section 1725.5, to engage in the performance of any work under this Contract.

19.4.1.16 Failure to comply with any applicable federal statutes and regulations regarding minimum wages, withholding, payrolls and basic records, apprentice and trainee employment requirements, equal employment opportunity requirements, Copeland Act requirements, Davis-Bacon Act and related requirements, Contract Work Hours and Safety Standards Act requirements, if applicable.

19.4.1.17 Failure to properly maintain or clean up the Site.

19.4.1.18 Failure to timely indemnify, defend, or hold harmless the District.

19.4.1.19 Any payments due to the District, including but not limited to payments for failed tests, utilities changes, or permits.

19.4.1.20 Failure to pay Subcontractor(s) or supplier(s) as required by law and by the Contract Documents.

19.4.1.21 Failure to pay any royalty, license or similar fees.

19.4.1.22 Contractor is otherwise in breach, default, or in substantial violation of any provision of this Contract.

19.4.1.23 Failure to perform any implementation and/or monitoring required by any SWPPP for the Project and/or the imposition of any penalties or fines therefore whether imposed on the District or Contractor.

19.4.2 Reallocation of Withheld Amounts

19.4.2.1 District may, in its discretion, apply any withheld amount to pay outstanding claims or obligations as defined herein. In so doing, District shall make such payments on behalf of Contractor. If any payment is so made by District, then that amount shall be considered a payment made under Contract by District to Contractor and District shall not be liable to Contractor for any payment made in good faith. These payments may be made without prior judicial determination of claim or obligation. District will render Contractor an accounting of funds disbursed on behalf of Contractor.

19.4.2.2 If Contractor defaults or neglects to carry out the Work in accordance with the Contract Documents or fails to perform any provision thereof, District may, after **FORTY-EIGHT (48)** hours' written notice to the Contractor and, without prejudice to any other remedy, make good such deficiencies. The District shall adjust the total Contract Price by reducing the amount thereof by the cost of making good such deficiencies. If District deems it inexpedient to correct Work that is damaged, defective, or not done in accordance with Contract provisions, an equitable reduction in the Contract Price (of at least one hundred fifty percent (150%) of the estimated reasonable value of the nonconforming Work) shall be made therefor.

19.4.3 Payment After Cure

When Contractor removes the grounds for declining approval, payment shall be made for amounts withheld because of them. No interest shall be paid on any retainage or amounts withheld due to the failure of the Contractor to perform in accordance with the terms and conditions of the Contract Documents.

19.5 Subcontractor Payments

19.5.1 Payments to Subcontractors

No later than seven (7) days after receipt, or pursuant to Business and Professions Code section 7108.5 and Public Contract Code section 7107, the Contractor shall pay to each Subcontractor, out of the amount paid to the Contractor on account of such Subcontractor's portion of the Work, the amount to which said Subcontractor is entitled. The Contractor shall, by appropriate agreement with each Subcontractor, require each Subcontractor to make payments to its Sub-subcontractors in a similar manner.

19.5.2 No Obligation of District for Subcontractor Payment

The District shall have no obligation to pay, or to see to the payment of, money to a Subcontractor except as may otherwise be required by law.

19.5.3 Joint Checks

District shall have the right in its sole discretion, if necessary for the protection of the District, to issue joint checks made payable to the Contractor and Subcontractors and/or material or equipment suppliers. The joint check payees shall be responsible for the allocation and disbursement of funds included as part of any such joint payment. In no event shall any joint check payment be construed to create any

contract between the District and a Subcontractor of any tier, or a material or equipment supplier, any obligation from the District to such Subcontractor or a material or equipment supplier, or rights in such Subcontractor or a material or equipment supplier against the District.

20. COMPLETION OF THE WORK

20.1 Completion

20.1.1 District will accept completion of Contract and have the Notice of Completion recorded when the entire Work shall have been completed to the satisfaction of District.

20.1.2 The Work may only be accepted as complete by action of the governing board of the District.

20.1.3 District, at its sole option, may accept completion of Contract and have the Notice of Completion recorded when the entire Work shall have been completed to the satisfaction of District, except for minor corrective items, as distinguished from incomplete items. If Contractor fails to complete all minor corrective items within fifteen (15) days after the date of the District's acceptance of completion, District shall withhold from the final payment one hundred fifty percent (150%) of an estimate of the amount sufficient to complete the corrective items, as determined by District, until the item(s) are completed.

20.1.4 At the end of the 15-day period, if there are any items remaining to be corrected, District may elect to proceed as provided herein related to adjustments to Contract Price, and/or District's right to perform the Work of the Contractor.

20.2 Close-Out/Certification Procedures

20.2.1 Punch List

The Contractor shall notify the Architect when Contractor considers the Work complete. Upon notification, Architect will prepare a list of minor items to be completed or corrected ("Punch List"). The Contractor and/or its Subcontractors shall proceed promptly to complete and correct items on the Punch List. Failure to include an item on Punch List does not alter the responsibility of the Contractor to complete all Work in accordance with the Contract Documents.

20.2.2 Close-Out/Certification Requirements

20.2.2.1 Utility Connections

Buildings shall be connected to water, gas, sewer, and electric services, complete and ready for use. Service connections shall be made and existing services reconnected.

20.2.2.2 Record Drawings and Record Specifications

20.2.2.2.1 Contractor shall provide exact Record Drawings of the Work ("As-Builts") and Record Specifications upon completion of the Project and as a condition precedent to approval of final payment.

20.2.2.2.2 Contractor shall obtain the Inspector's approval of the corrected prints and employ a competent draftsman to transfer the Record Drawings information to the most current version of AutoCAD that is, at that time, currently utilized for plan check submission by either the District, the Architect, OPSC, and/or DSA, and print a complete set of transparent sepias. When completed, Contractor shall deliver corrected sepias and diskette/CD/other data storage device acceptable to District with AutoCAD file to the District.

20.2.2.2.3 Contractor is liable and responsible for any and all inaccuracies in the Record Drawings and Record Specifications, even if inaccuracies become evident at a future date.

20.2.2.3 Maintenance Manuals: Contractor shall prepare all operation and maintenance manuals and date as indicated in the Specifications.

20.2.2.4 Source Programming: Contractor shall provide all source programming for all items in the Project.

20.2.2.5 Verified Reports: Contractor shall completely and accurately fill out and file forms DSA 6-C or DSA 152 (or current form), as appropriate. Refer to section 4-336 and section 4-343 of Part 1, Title 24 of the California Code of Regulations.

20.3 Final Inspection

20.3.1 Contractor shall comply with Punch List procedures as provided herein, and maintain the presence of a Project Superintendent and Project Manager until the Punch List is complete to ensure proper and timely completion of the Punch List. Under no circumstances shall Contractor demobilize its forces prior to completion of the Punch List without District's prior written approval. Upon receipt of Contractor's written notice that all of the Punch List items have been fully completed and the Work is ready for final inspection and District acceptance, Architect and Project Inspector will inspect the Work and shall submit to Contractor and District a final inspection report noting the Work, if any, required in order to complete in accordance with the Contract Documents. Absent unusual circumstances, this report shall consist of the Punch List items not yet satisfactorily completed.

20.3.2 Upon Contractor's completion of all items on the Punch List and any other uncompleted portions of the Work, the Contractor shall notify the District and Architect, who shall again inspect such Work. If the Architect finds the Work complete and acceptable under the Contract Documents, the Architect will notify Contractor, who shall then jointly submit to the Architect and the District its final Application for Payment.

20.3.3 Final Inspection Requirements

20.3.3.1 Before calling for final inspection, Contractor shall determine that the following have been performed:

20.3.3.1.1 The Work has been completed.

20.3.3.1.2 All life safety items are completed and in working order.

20.3.3.1.3 Mechanical and electrical Work are complete and tested, fixtures are in place, connected, and ready for tryout.

20.3.3.1.4 Electrical circuits scheduled in panels and disconnect switches labeled.

20.3.3.1.5 Painting and special finishes complete.

20.3.3.1.6 Doors complete with hardware, cleaned of protective film, relieved of sticking or binding, and in working order.

20.3.3.1.7 Tops and bottoms of doors sealed.

20.3.3.1.8 Floors waxed and polished as specified.

20.3.3.1.9 Broken glass replaced and glass cleaned.

20.3.3.1.10 Grounds cleared of Contractor's equipment, raked clean of debris, and trash removed from Site.

20.3.3.1.11 Work cleaned, free of stains, scratches, and other foreign matter, and damaged and broken material replaced.

20.3.3.1.12 Finished and decorative work shall have marks, dirt, and superfluous labels removed.

20.3.3.1.13 Final cleanup, as provided herein.

20.4 Costs of Multiple Inspections

More than two (2) requests of the District to make a final inspection shall be considered an additional service of District, Architect, Construction Manager, and/or Project Inspector, and all subsequent costs will be invoiced to Contractor and if funds are available, withheld from remaining payments.

20.5 Partial Occupancy or Use Prior to Completion

20.5.1 District's Rights to Occupancy

The District may occupy or use any completed or partially completed portion of the Work at any stage, and such occupancy shall not constitute the District's Final Acceptance of any part of the Work. Neither the District's Final Acceptance, the making of Final Payment, any provision in Contract Documents, nor the use or occupancy of the Work, in whole or in part, by District shall constitute acceptance of Work not in accordance with the Contract Documents nor relieve the Contractor or the Contractor's Performance Bond Surety from liability with respect to any warranties or responsibility for faulty or defective Work or materials, equipment and workmanship incorporated therein. In the event that the District occupies or uses any completed or partially completed portion of the Work, the Contractor shall remain responsible for payments, security, maintenance, heat, utilities, damage to the Work, insurance, the period for correction of the Work, and the commencement of warranties required by the Contract Documents unless the Contractor requests in writing, and the District agrees, to otherwise divide those responsibilities. Any

dispute as to responsibilities shall be resolved pursuant to the Claims and Disputes provisions herein, with the added provision that during the dispute process, the District shall have the right to occupy or use any portion of the Work that it needs or desires to use.

20.5.2 Inspection Prior to Occupancy or Use

Immediately prior to partial occupancy or use, the District, the Contractor, and the Architect shall jointly inspect the area to be occupied or portion of the Work to be used in order to determine and record the condition of the Work.

20.5.3 No Waiver

Unless otherwise agreed upon, partial or entire occupancy or use of a portion or portions of the Work shall not constitute beneficial occupancy or District's acceptance of the Work not complying with the requirements of the Contract Documents.

21. FINAL PAYMENT AND RETENTION

21.1 Final Payment

Upon receipt and approval of a valid and final Application for Payment, the Architect will issue a final Certificate of Payment. The District shall thereupon jointly inspect the Work and either accept the Work as complete or notify the Architect and the Contractor in writing of reasons why the Work is not complete. Upon District's acceptance of the Work of the Contractor as fully complete by the Governing Board of the District (that, absent unusual circumstances, will occur when the Punch List items have been satisfactorily completed), the District shall record a Notice of Completion with the County Recorder, and the Contractor shall, upon receipt of final payment from the District, pay the amount due Subcontractors.

21.2 Prerequisites for Final Payment

The following conditions must be fulfilled prior to Final Payment:

21.2.1 A full release of all Stop Payment Notices served in connection with the Work shall be submitted by Contractor.

21.2.2 A duly completed and executed conditional waiver and release upon final payment compliant with Civil Code section 8136, from the Contractor and each subcontractor of any tier and supplier to be paid from the final payment.

21.2.3 A duly completed and executed unconditional waiver and release upon progress payment compliant with Civil Code section 8134, from the Contractor and each subcontractor of any tier and supplier that was paid from the previous progress payments.

21.2.4 A duly completed and executed Document 00 65 19.26, "AGREEMENT AND RELEASE OF ANY AND ALL CLAIMS" from the Contractor.

21.2.5 The Contractor shall have made all corrections to the Work that are required to remedy any defects therein, to obtain compliance with the Contract

Documents or any requirements of applicable codes and ordinances, or to fulfill any of the orders or directions of District required under the Contract Documents.

21.2.6 Each Subcontractor shall have delivered to the Contractor all written guarantees, warranties, applications, and bonds required by the Contract Documents for its portion of the Work.

21.2.7 Contractor must have completed all requirements set forth under "Close-Out/Certification Procedures," including, without limitation, submission of an approved set of complete Record Drawings.

21.2.8 Architect shall have issued its written approval that final payment can be made.

21.2.9 The Contractor shall have delivered to the District all manuals and materials required by the Contract Documents, which must be approved by the District.

21.2.10 The Contractor shall have completed final clean-up as provided herein.

21.3 Retention

21.3.1 The retention, less any amounts disputed by the District or that the District has the right to withhold pursuant to provisions herein, shall be paid:

21.3.1.1 After approval by the Architect of the Application and Certificate of Payment,

21.3.1.2 After the satisfaction of the conditions set forth herein, and

21.3.1.3 After forty-five (45) days after the recording of the Notice of Completion by District.

21.3.2 No interest shall be paid on any retention, or on any amounts withheld due to a failure of the Contractor to perform, in accordance with the terms and conditions of the Contract Documents, except as provided to the contrary in any Escrow Agreement between the District and the Contractor pursuant to Public Contract Code section 22300.

21.4 Substitution of Securities

The District will permit the substitution of securities in accordance with the provisions of Public Contract Code section 22300.

22. UNCOVERING OF WORK

If a portion of the Work is covered without Inspector or Architect approval or not in compliance with the Contract Documents, it must, if required in writing by the District, the Project Inspector, or the Architect, be uncovered for the Project Inspector's or the Architect's observation and be corrected, replaced, and/or recovered at the Contractor's expense without change in the Contract Price or Contract Time.

23. NONCONFORMING WORK AND CORRECTION OF WORK

23.1 Nonconforming Work

23.1.1 Contractor shall promptly remove from Premises all Work identified by District as failing to conform to the Contract Documents whether incorporated or not. Contractor shall promptly replace and re-execute its own Work to comply with the Contract Documents without additional expense to the District and shall bear the expense of making good all work of other contractors destroyed or damaged by any removal or replacement pursuant hereto and/or any delays to the District or other Contractors caused thereby.

23.1.2 If Contractor does not remove Work that District has identified as failing to conform to the Contract Documents within a reasonable time, not to exceed **FORTY-EIGHT (48)** hours, District may remove it and may store any material at Contractor's expense. If Contractor does not pay expense(s) of that removal within ten (10) days' time thereafter, District may, upon ten (10) days' written notice, sell any material at auction or at private sale and shall deduct all costs and expenses incurred by the District and/or District may withhold those amounts from payment(s) to Contractor.

23.2 Correction of Work

23.2.1 Correction of Rejected Work

Pursuant to the notice provisions herein, the Contractor shall immediately correct the Work rejected by the District, the Architect, or the Project Inspector as failing to conform to the requirements of the Contract Documents, whether observed before or after Completion and whether or not fabricated, installed, or completed. The Contractor shall bear costs of correcting the rejected Work, including additional testing, inspections, and compensation for the Inspector's or the Architect's services and expenses made necessary thereby.

23.2.2 One-Year Warranty Corrections

If, within one (1) year after the date of Completion of the Work or a designated portion thereof, or after the date for commencement of warranties established hereunder, or by the terms of an applicable special warranty required by the Contract Documents, any of the Work is found to be not in accordance with the requirements of the Contract Documents, the Contractor shall correct it promptly after receipt of written notice from the District to do so. This period of one (1) year shall be extended with respect to portions of the Work first performed after Completion by the period of time between Completion and the actual performance of the Work. This obligation hereunder shall survive District's acceptance of the Work under the Contract and termination of the Contract. The District shall give such notice promptly after discovery of the condition.

23.3 District's Right to Perform Work

23.3.1 If the Contractor should neglect to prosecute the Work properly or fail to perform any provisions of this contract, the District, after **FORTY-EIGHT (48)** hours written notice to the Contractor, may, without prejudice to any other remedy it may

have, make good such deficiencies and may deduct the cost thereof from the payment then or thereafter due the Contractor.

23.3.2 If it is found at any time, before or after completion of the Work, that Contractor has varied from the Drawings and/or Specifications, including, but not limited to, variation in material, quality, form, or finish, or in the amount or value of the materials and labor used, District may require at its option:

23.3.2.1 That all such improper Work be removed, remade or replaced, and all work disturbed by these changes be made good by Contractor at no additional cost to the District;

23.3.2.2 That the District deduct from any amount due Contractor the sum of money equivalent to the difference in value between the work performed and that called for by the Drawings and Specifications; or

23.3.2.3 That the District exercise any other remedy it may have at law or under the Contract Documents, including but not limited to the District hiring its own forces or another contractor to replace the Contractor's nonconforming Work, in which case the District shall either issue a deductive Change Order, a Construction Change Directive, or invoice the Contractor for the cost of that work. Contractor shall pay any invoices within thirty (30) days of receipt of same or District may withhold those amounts from payment(s) to Contractor.

24. TERMINATION AND SUSPENSION

24.1 District's Right to Terminate Contractor for Cause

24.1.1 Grounds for Termination: The District, in its sole discretion, may terminate the Contract and/or terminate the Contractor's right to perform the work of the Contract based upon any of the following:

24.1.1.1 Contractor refuses or fails to execute the Work or any separable part thereof with sufficient diligence as will ensure its completion within the time specified or any extension thereof, or

24.1.1.2 Contractor fails to complete said Work within the time specified or any extension thereof, or

24.1.1.3 Contractor persistently fails or refused to perform Work or provide material of sufficient quality as to be in compliance with Contract Documents; or

24.1.1.4 Contractor persistently or repeatedly refuses fails, except in cases for which extension of time is provided, to supply enough properly skilled workers or proper materials to complete the Work in the time specified; or

24.1.1.5 Contractor fails to make prompt payment to Subcontractors, or for material, or for labor; or

24.1.1.6 Contractor persistently disregards laws, or ordinances, or instructions of District; or

24.1.1.7 Contractor fails to supply labor, including that of Subcontractors, that is sufficient to prosecute the Work or that can work in harmony with all other elements of labor employed or to be employed on the Work; or

24.1.1.8 Contractor or its Subcontractor(s) is/are otherwise in breach, default, or in substantial violation of any provision of this Contract, including but not limited to a lapse in licensing or registration.

24.1.2 Notification of Termination

24.1.2.1 Upon the occurrence at District's sole determination of any of the above conditions, District may, without prejudice to any other right or remedy, serve written notice upon Contractor and its Surety of District's termination of this Contract and/or the Contractor's right to perform the work of the Contract. This notice will contain the reasons for termination. Unless, within three (3) days after the service of the notice, any and all condition(s) shall cease, and any and all violation(s) shall cease, or arrangement satisfactory to District for the correction of the condition(s) and/or violation(s) be made, this Contract shall cease and terminate. Upon Termination, Contractor shall not be entitled to receive any further payment until the entire Work is finished.

24.1.2.2 Upon Termination, District may immediately serve written notice of tender upon Surety whereby Surety shall have the right to take over and perform this Contract only if Surety:

24.1.2.2.1 Within three (3) days after service upon it of the notice of tender, gives District written notice of Surety's intention to take over and perform this Contract; and

24.1.2.2.2 Commences performance of this Contract within three (3) days from date of serving of its notice to District.

24.1.2.3 Surety shall not utilize Contractor in completing the Project if the District notifies Surety of the District's objection to Contractor's further participation in the completion of the Project. Surety expressly agrees that any contractor which Surety proposes to fulfill Surety's obligations is subject to District's approval. District's approval shall not be unreasonably withheld, conditioned or delayed.

24.1.2.4 If Surety fails to notify District or begin performance as indicated herein, District may take over the Work and execute the Work to completion by any method it may deem advisable at the expense of Contractor and/or its Surety. Contractor and/or its Surety shall be liable to District for any excess cost or other damages the District incurs thereby. Time is of the essence in this Contract. If the District takes over the Work as herein provided, District may, without liability for so doing, take possession of and utilize in completing the Work such materials, appliances, plan, and other property belonging to Contractor as may be on the Site of the Work, in bonded storage, or previously paid for.

24.1.3 Effect of Termination

24.1.3.1 Contractor shall, only if ordered to do so by the District, immediately remove from the Site all or any materials and personal property belonging to Contractor that have not been incorporated in the construction of the Work, or which are not in place in the Work. The District retains the right, but not the obligation, to keep and use any materials and personal property belonging to Contractor that have not been incorporated in the construction of the Work, or which are not in place in the Work. The Contractor and its Surety shall be liable upon the performance bond for all damages caused to the District by reason of the Contractor's failure to complete the Contract.

24.1.3.2 In the event that the District shall perform any portion of, or the whole of the Work, pursuant to the provisions of the General Conditions, the District shall not be liable nor account to the Contractor in any way for the time within which, or the manner in which, the Work is performed by the District or for any changes the District may make in the Work or for the money expended by the District in satisfying claims and/or suits and/or other obligations in connection with the Work.

24.1.3.3 In the event that the Contract is terminated for any reason, no allowances or compensation will be granted for the loss of any anticipated profit by the Contractor or any impact or impairment of Contractor's bonding capacity.

24.1.3.4 If the expense to the District to finish the Work exceeds the unpaid Contract Price, Contractor and Surety shall pay difference to District within twenty-one (21) days of District's request.

24.1.3.5 The District shall have the right (but shall have no obligation) to assume and/or assign to a general contractor or construction manager or other third party who is qualified and has sufficient resources to complete the Work, the rights of the Contractor under its subcontracts with any or all Subcontractors. In the event of an assumption or assignment by the District, no Subcontractor shall have any claim against the District or third party for Work performed by Subcontractor or other matters arising prior to termination of the Contract. The District or any third party, as the case may be, shall be liable only for obligations to the Subcontractor arising after assumption or assignment. Should the District so elect, the Contractor shall execute and deliver all documents and take all steps, including the legal assignment of its contractual rights, as the District may require, for the purpose of fully vesting in the District the rights and benefits of its Subcontractor under Subcontracts or other obligations or commitments. All payments due the Contractor hereunder shall be subject to a right of offset by the District for expenses and damages suffered by the District as a result of any default, acts, or omissions of the Contractor. Contractor must include this assignment provision in all of its contracts with its Subcontractors.

24.1.3.6 The foregoing provisions are in addition to and not in limitation of any other rights or remedies available to District.

24.1.4 Emergency Termination of Public Contracts Act of 1949

24.1.4.1 This Contract is subject to termination as provided by sections 4410 and 4411 of the Government Code of the State of California, being a portion of the Emergency Termination of Public Contracts Act of 1949.

24.1.4.1.1 Section 4410 of the Government Code states:

In the event a national emergency occurs, and public work, being performed by contract, is stopped, directly or indirectly, because of the freezing or diversion of materials, equipment or labor, as the result of an order or a proclamation of the President of the United States, or of an order of any federal authority, and the circumstances or conditions are such that it is impracticable within a reasonable time to proceed with a substantial portion of the work, then the public agency and the contractor may, by written agreement, terminate said contract.

24.1.4.1.2 Section 4411 of the Government Code states:

Such an agreement shall include the terms and conditions of the termination of the contract and provision for the payment of compensation or money, if any, which either party shall pay to the other or any other person, under the facts and circumstances in the case.

24.1.4.2 Compensation to the Contractor shall be determined at the sole discretion of District on the basis of the reasonable value of the Work done, including preparatory work. As an exception to the foregoing and at the District's discretion, in the case of any fully completed separate item or portion of the Work for which there is a separate previously submitted unit price or item on the accepted schedule of values, that price shall control. The District, at its sole discretion, may adopt the Contract Price as the reasonable value of the work done or any portion thereof.

24.2 Termination of Contractor for Convenience

24.2.1 District in its sole discretion may terminate the Contract upon three (3) days' written notice to the Contractor. Under a termination for convenience, the District retains the right to all the options available to the District if there is a termination for cause. In case of a termination for convenience, the Contractor shall have no claims against the District except:

24.2.1.1 The actual cost for labor, materials, and services performed that is unpaid and adequately documented through timesheets, invoices, receipts, or otherwise, and

24.2.1.2 Five percent (5%) of the total cost of work performed as of the date of termination, or five percent (5%) of the value of the Work yet to be performed, whichever is less. This five percent (5%) amount shall be full compensation for all Contractor's and Subcontractor(s)' mobilization and/or demobilization costs and any anticipated loss profits resulting from termination of the Contractor for convenience.

24.3 Suspension of Work

24.3.1 District in its sole discretion may suspend, delay or interrupt the Work in whole or in part for such period of time as the District may determine upon three (3) days written notice to the Contractor.

24.3.1.1 An adjustment may be made for changes in the cost of performance of the Work caused by any such suspension, delay or interruption. No adjustment shall be made to the extent:

24.3.1.1.1 That performance is, was or would have been so suspended, delayed or interrupted by another cause for which Contractor is responsible; or

24.3.1.1.2 That an equitable adjustment is made or denied under another provision of the Contract; or

24.3.1.1.3 That the suspension of Work was the direct or indirect result of Contractor's failure to perform any of its obligations hereunder.

24.3.1.2 Any adjustments in cost of performance may have a fixed or percentage fee as provided in the section on Format for Proposed Change Order herein. This amount shall be full compensation for all Contractor's and its Subcontractor(s)' changes in the cost of performance of the Contract caused by any such suspension, delay or interruption.

25. CLAIMS PROCESS

25.1 Performance during Claim Process

Contractor and its subcontractors shall continue to perform its Work under the Contract and shall not cause a delay of the Work during any dispute, claim, negotiation, mediation, or arbitration proceeding, except by written agreement by the District.

25.2 Definition of Claim

25.2.1 Pursuant to Public Contract Code section 9204, the term "Claim" means a separate demand by the Contractor sent by registered mail or certified mail with return receipt requested, for one or more of the following:

25.2.1.1 A time extension, including without limitation, for relief of damages or penalties for delay assessed by the District under the Contract;

25.2.1.2 Payment by the District of money or damages arising from work done by, or on behalf of, the Contractor pursuant to the Contract and payment of which is not otherwise expressly provided for or to which Contractor is not otherwise entitled to; or

25.2.1.3 An amount of payment disputed by the District.

25.3 Claims Presentation

25.3.1 If Contractor intends to apply for an increase in the Contract Price or Contract Time for any reason including, without limitation, the acts of District or its agents, Contractor shall, within thirty (30) days after the event giving rise to the Claim, give notice of the Claim in writing, including an itemized statement of the details and amounts of its Claim for any increase in the Contract Price of Contract Time, including a Schedule Analysis and any and all other documentation substantiating Contractor's claimed damages. Otherwise, Contractor shall have waived and relinquished its dispute against the District and Contractor's claims for compensation or an extension of time shall be forfeited and invalidated. Likewise, failure to timely submit a claim and the requisite supporting documentation shall constitute a waiver of such claim.

25.3.2 The Claim shall identify:

25.3.2.1 The issues, events, conditions, circumstances and/or causes giving rise to the dispute, and shall show, in detail, the cause and effect of same;

25.3.2.2 The pertinent dates and/or durations and actual and/or anticipated effects on the Contract Price, Contract Schedule milestones and/or Contract Time adjustments;

25.3.2.3 The line-item costs for labor, material, and/or equipment, if applicable; or

25.3.2.4 A request by Contractor, if any, to waive the claims procedure under Public Contract Code section 9204 and proceed directly to the commencement of a civil action or binding arbitration.

25.3.3 The Claim shall include the following certification by the Contractor:

25.3.3.1 The undersigned Contractor certifies under penalty of perjury that the attached dispute is made in good faith; that the supporting data is accurate and complete to the best of my knowledge and belief; that the amount requested accurately reflects the adjustment for which Contractor believes the District is liable; and that I am duly authorized to certify the dispute on behalf of the Contractor.

25.3.3.2 Furthermore, Contractor understands that the value of the attached dispute expressly includes any and all of the Contractor's costs and expenses, direct and indirect, resulting from the Work performed on the Project, additional time required on the Project and/or resulting from delay to the Project. Contractor may not separately recover for overhead or other indirect costs. Any costs, expenses, damages, or time extensions not included are deemed waived.

25.4 Claim Resolution pursuant to Public Contract Code section 9204

25.4.1 STEP 1:

25.4.1.1 Upon receipt of a Claim by registered or certified mail, return receipt requested, including the documents necessary to substantiate it, the District shall conduct a reasonable review of the Claim and, within a period **not to exceed 45 days**, shall provide the Contractor a written statement identifying what portion of the Claim is disputed and what portion is undisputed. Upon receipt of a Claim, the District and Contractor may, **by mutual agreement, extend the time period** to provide a written statement. If the District needs approval from its governing body to provide the Contractor a written statement identifying the disputed portion and the undisputed portion of the Claim, and the governing body does not meet within the 45 days or within the mutually agreed to extension of time following receipt of Claim sent by registered mail or certified mail, return receipt requested, the District shall have **up to three (3) days following the next duly publicly noticed meeting of the governing body after the 45-day period, or extension**, expires to provide Contractor a written statement identifying the disputed portion and the undisputed portion.

25.4.1.1.1 Any payment due on an undisputed portion of the Claim shall be processed and made within 60 days after the District issues its written statement. Amounts not paid in a timely manner as required by this section, section 25.4, shall bear interest at seven percent (7%) per annum.

25.4.1.2 Upon receipt of a Claim, the parties may mutually agree to waive, in writing, mediation and proceed directly to the commencement of a civil action or binding arbitration, as applicable. In this instance, District and Contractor must comply with the sections below regarding Public Contract Code section 20104 et seq. and Government Code Claim Act Claims.

25.4.1.3 If the District fails to issue a written statement, or to otherwise meet the time requirements of this section, this shall result in the Claim being deemed rejected in its entirety. A Claim that is denied by reason of the District's failure to have responded to a Claim, or its failure to otherwise meet the time requirements of this section, shall not constitute an adverse finding with regard to the merits of the Claim or the responsibility or qualifications of Contractor.

25.4.2 STEP 2:

25.4.2.1 If Contractor disputes the District's written response, or if the District fails to respond to a Claim within the time prescribed, Contractor may demand in writing an informal conference to meet and confer for settlement of the issues in dispute. Upon receipt of a demand in writing sent by registered mail or certified mail, return receipt requested, the District shall schedule a meet and confer conference within 30 days for settlement of the dispute. Within 10 business days following the conclusion of the meet and confer conference, if the Claim or any portion of the Claim remains in dispute, the District shall provide the Contractor a written statement identifying the portion of the Claim that remains in dispute and the portion that is undisputed.

25.4.2.1.1.1 Any payment due on an undisputed portion of the Claim shall be processed and made within 60 days after the District issues its

written statement. Amounts not paid in a timely manner as required by this section, section 25.4, shall bear interest at seven percent (7%) per annum.

25.4.3 STEP 3:

25.4.3.1 Any disputed portion of the Claim, as identified by Contractor in writing, shall be submitted to nonbinding mediation, with the District and Contractor sharing the associated costs equally. The District and Contractor shall mutually agree to a mediator within 10 business days after the disputed portion of the Claim has been identified in writing. If the parties cannot agree upon a mediator, each party shall select a mediator and those mediators shall select a qualified neutral third party to mediate with regard to the disputed portion of the Claim. Each party shall bear the fees and costs charged by its respective mediator in connection with the selection of the neutral mediator. If mediation is unsuccessful, the parts of the Claim remaining in dispute shall be subject to applicable procedures outside this section.

25.4.3.1.1 For purposes of this section, mediation includes any nonbinding process, including, but not limited to, neutral evaluation or a dispute review board, in which an independent third party or board assists the parties in dispute resolution through negotiation or by issuance of an evaluation. Any mediation utilized shall conform to the timeframes in this section.

25.4.3.2 Unless otherwise agreed to by the District and Contractor in writing, the mediation conducted pursuant to this section shall excuse any further obligation under Public Contract Code section 20104.4 to mediate after litigation has been commenced.

25.4.4 STEP 4:

25.4.4.1 If mediation under this section does not resolve the parties' dispute, the District may, but does not require arbitration of disputes under private arbitration or the Public Works Contract Arbitration Program.

25.5 Subcontractor Pass-Through Claims

25.5.1 If a subcontractor or a lower tier subcontractor lacks legal standing to assert a claim against a District because privity of contract does not exist, the contractor may present to the District a Claim on behalf of a subcontractor or lower tier subcontractor. A subcontractor may request in writing, either on his or her own behalf or on behalf of a lower tier subcontractor, that Contractor present a Claim for work which was performed by the subcontractor or by a lower tier subcontractor on behalf of the subcontractor. The subcontractor requesting that the Claim be presented to the District shall furnish reasonable documentation to support the Claim.

25.5.2 Within 45 days of receipt of this written request from a subcontractor, Contractor shall notify the subcontractor in writing as to whether the Contractor presented the Claim to the District and, if Contractor did not present the Claim, provide the subcontractor with a statement of the reasons for not having done so.

25.5.3 The Contractor shall bind all its Subcontractors to the provisions of this section and will hold the District harmless against Claims by Subcontractors.

25.6 Government Code Claim Act Claim

25.6.1 If a claim, or any portion thereof, remains in dispute upon satisfaction of all applicable Claim Resolution requirements, including those pursuant to Public Contract Code section 9204, the Contractor shall comply with all claims presentation requirements as provided in Chapter 1 (commencing with section 900) and Chapter 2 (commencing with section 910) of Part 3 of Division 3.6 of Title 1 of Government Code as a condition precedent to the Contractor's right to bring a civil action against the District. For purposes of those provisions, the running of the time within which a claim must be presented to the District shall be tolled from the time Contractor submits its written Claim until the time the Claim is denied, including any time utilized by any applicable meet and confer process.

25.7 Claim Resolution pursuant to Public Contract Code section 20104 et seq.

25.7.1 In the event of a disagreement between the parties as to performance of the Work, the interpretation of this Contract, or payment or nonpayment for Work performed or not performed, the parties shall attempt to resolve all claims of three hundred seventy-five thousand dollars ($375,000) or less which arise between Contractor and District by those procedures set forth in Public Contract Code section 20104, et seq., to the extent applicable.

25.7.1.1 Contractor shall file with the District any written Claim, including the documents necessary to substantiate it, upon the application for final payment.

25.7.1.2 For claims of less than fifty thousand dollars ($50,000), the District shall respond in writing within forty-five (45) days of receipt of the Claim or may request in writing within thirty (30) days of receipt of the Claim any additional documentation supporting the Claim or relating to defenses or claims the District may have against the Contractor.

25.7.1.2.1 If additional information is required, it shall be requested and provided by mutual agreement of the parties.

25.7.1.2.2 District's written response to the documented Claim shall be submitted to the Contractor within fifteen (15) days after receipt of the further documentation or within a period of time no greater than that taken by the Contractor to produce the additional information, whichever is greater.

25.7.1.3 For claims of over fifty thousand dollars ($50,000) and less than or equal to three hundred seventy-five thousand dollars ($375,000), the District shall respond in writing to all written Claims within sixty (60) days of receipt of the claim, or may request, in writing, within thirty (30) days of receipt of the Claim any additional documentation supporting the Claim or relating to defenses or claims the District may have against the Contractor.

25.7.1.3.1 If additional information is required, it shall be requested and provided upon mutual agreement of the District and the Contractor.

25.7.1.3.2 The District's written response to the Claim, as further documented, shall be submitted to the Contractor within thirty (30) days after receipt of the further documentation, or within a period of time no greater than that taken by the Contractor to produce the additional information or requested documentation, whichever is greater.

25.7.1.4 If Contractor disputes the District's written response, or the District fails to respond within the time prescribed, Contractor may so notify the District, in writing, either within fifteen (15) days of receipt of the District's response or within fifteen (15) days of the District's failure to respond within the time prescribed, respectively, and demand an informal conference to meet and confer for settlement of the issues in dispute. Upon a demand, the District shall schedule a meet and confer conference within thirty (30) days for settlement of the dispute.

25.7.1.5 Following the meet and confer conference, if the Claim or any portion of it remains in dispute, the Contractor may file a claim as provided in Chapter 1 (commencing with Section 900) and Chapter 2 (commencing with Section 910) of Part 3 of Division 3.6 of Title 1 of the Government Code. For purposes of those provisions the running of the time within which a claim must be filed shall be tolled from the time the Contractor submits its written Claim until the time the Claim is denied, including any period of time utilized by the meet and confer process.

25.7.1.6 For any civil action filed to resolve claims filed pursuant to this section, within sixty (60) days, but no earlier than thirty (30) days, following the filing of responsive pleadings, the court shall submit the matter to nonbinding mediation unless waived by mutual stipulation of both parties. The mediation process shall provide for the selection within fifteen (15) days by both parties of a disinterested third person as mediator, shall be commenced within thirty (30) days of the submittal, and shall be concluded within fifteen (15) days from the commencement of the mediation unless a time requirement is extended upon a good cause showing to the court or by stipulation of both parties. If the parties fail to select a mediator within the 15-day period, any party may petition the court to appoint the mediator.

25.7.1.7 If the matter remains in dispute, the case shall be submitted to judicial arbitration pursuant to Chapter 2.5 (commencing with Section 1141.10) of the Title 3 of Part 3 of the Code of Civil Procedure, notwithstanding Section 1141.11 of that code. The Civil Discovery Act of 1986, (Article 3 (commencing with Section 2016) of Chapter 3 of Title 3 of part 4 of the Code of Civil Procedure) shall apply to any proceeding brought under this subdivision consistent with the rules pertaining to judicial arbitration.

25.7.1.8 The District shall not fail to pay money as to any portion of a Claim which is undisputed except as otherwise provided in the Contract Documents. In any suit filed pursuant to this section, the District shall pay interest due at the legal rate on any arbitration award or judgment. Interest shall begin to accrue on the date the suit is filed in a court of law.

25.7.2 Contractor shall bind its Subcontractors to the provisions of this Section and will hold the District harmless against disputes by Subcontractors.

25.8 Claim Resolution Non-Applicability

25.8.1 The procedures for dispute and claim resolutions set forth in this Article shall not apply to the following:

25.8.1.1 Personal injury, wrongful death or property damage claims;

25.8.1.2 Latent defect or breach of warranty or guarantee to repair;

25.8.1.3 Stop payment notices;

25.8.1.4 District's rights set forth in the Article on Suspension and Termination;

25.8.1.5 Disputes arising out of labor compliance enforcement by the Department of Industrial Relations; or

25.8.1.6 District rights and obligations as a public entity set forth in applicable statutes; provided, however, that penalties imposed against a public entity by statutes, including, but not limited to, Public Contract Code sections 20104.50 and 7107, shall be subject to the Claim Resolution requirements provided in this Article.

25.9 Attorney's Fees

25.9.1 Should litigation be necessary to enforce any terms or provisions of this Agreement, then each party shall bear its own litigation and collection expenses, witness fees, court costs and attorney's fees.

26. STATE LABOR, WAGE & HOUR, APPRENTICE, AND RELATED PROVISIONS

26.1 Labor Compliance and Enforcement

Since this Project is subject to labor compliance and enforcement by the Department of Industrial Relations ("DIR"), Contractor specifically acknowledges and understands that it shall perform the Work of this Agreement while complying with all the applicable provisions of Division 2, Part 7, Chapter 1, of the Labor Code and Title 8 of the California Code of Regulations, including, without limitation, the requirement that the Contractor and all Subcontractors shall timely furnish complete and accurate electronic certified payroll records directly to the DIR. The District may not issue payment if this requirement is not met.

26.2 Wage Rates, Travel, and Subsistence

26.2.1 Pursuant to the provisions of Article 2 (commencing at section 1770), Chapter 1, Part 7, Division 2, of the Labor Code, the general prevailing rate of per diem wages and the general prevailing rate for holiday and overtime work in the locality in which this public work is to be performed for each craft, classification, or type of worker needed to execute this Contract are on file at the District's principal office and copies will be made available to any interested party on request. Contractor shall obtain and post a copy of these wage rates at the job site.

26.2.2 Holiday and overtime work, when permitted by law, shall be paid for at the general prevailing rate of per diem wages for holiday and overtime work on file

with the Director of the Department of Industrial Relations, unless otherwise specified. The holidays upon which those rates shall be paid need not be specified by the District, but shall be all holidays recognized in the applicable collective bargaining agreement. If the prevailing rate is not based on a collectively bargained rate, the holidays upon which the prevailing rate shall be paid shall be as provided in Section 6700 of the Government Code.

26.2.3 Contractor shall pay and shall cause to be paid each worker engaged in Work on the Project the general prevailing rate of per diem wages determined by the Director of the Department of Industrial Relations, regardless of any contractual relationship which may be alleged to exist between Contractor or any Subcontractor and such workers.

26.2.4 If during the period this bid is required to remain open, the Director of the Department of Industrial Relations determines that there has been a change in any prevailing rate of per diem wages in the locality in which the Work under the Contract is to be performed, such change shall not alter the wage rates in the Notice to Bidders or the Contract subsequently awarded.

26.2.5 Pursuant to Labor Code section 1775, Contractor shall, as a penalty to District, forfeit the statutory amount (believed by the District to be currently up to two hundred dollars ($200) for each calendar day, or portion thereof, for each worker paid less than the prevailing rates, determined by the District and/or the Director, for the work or craft in which that worker is employed for any public work done under Contract by Contractor or by any Subcontractor under it. The difference between such prevailing wage rates and the amount paid to each worker for each calendar day or portion thereof for which each worker was paid less than the prevailing wage rate shall be paid to each worker by Contractor.

26.2.6 Any worker employed to perform Work on the Project, which Work is not covered by any classification listed in the general prevailing wage rate of per diem wages determined by the Director, shall be paid not less than the minimum rate of wages specified therein for the classification which most nearly corresponds to Work to be performed by him, and such minimum wage rate shall be retroactive to time of initial employment of such person in such classification.

26.2.7 Pursuant to Labor Code section 1773.1, per diem wages are deemed to include employer payments for health and welfare, pension, vacation, travel time, subsistence pay, and apprenticeship or other training programs authorized by Labor Code section 3093, and similar purposes.

26.2.8 Contractor shall post at appropriate conspicuous points on the Site of Project, a schedule showing all determined minimum wage rates and all authorized deductions, if any, from unpaid wages actually earned. In addition, Contractor shall post a sign-in log for all workers and visitors to the Site, a list of all subcontractors of any tier on the Site, and the required Equal Employment Opportunity poster(s).

26.3 Hours of Work

26.3.1 As provided in article 3 (commencing at section 1810), chapter 1, part 7, division 2, of the Labor Code, eight (8) hours of labor shall constitute a legal day's work. The time of service of any worker employed at any time by Contractor or by any Subcontractor on any subcontract under this Contract upon the Work or upon

any part of the Work contemplated by this Contract shall be limited and restricted by Contractor to eight (8) hours per day, and forty (40) hours during any one week, except as hereinafter provided. Notwithstanding the provisions hereinabove set forth, Work performed by employees of Contractor in excess of eight (8) hours per day and forty (40) hours during any one week, shall be permitted upon this public work upon compensation for all hours worked in excess of eight (8) hours per day at not less than one and one-half times the basic rate of pay.

26.3.2 Contractor shall keep and shall cause each Subcontractor to keep an accurate record showing the name of and actual hours worked each calendar day and each calendar week by each worker employed by Contractor in connection with the Work or any part of the Work contemplated by this Contract. The record shall be kept open at all reasonable hours to the inspection of District and to the Division of Labor Standards Enforcement of the DIR.

26.3.3 Pursuant to Labor Code section 1813, Contractor shall as a penalty to the District forfeit the statutory amount (believed by the District to be currently twenty-five dollars ($25)) for each worker employed in the execution of this Contract by Contractor or by any Subcontractor for each calendar day during which such worker is required or permitted to work more than eight (8) hours in any one calendar day and forty (40) hours in any one calendar week in violation of the provisions of article 3 (commencing at section 1810), chapter 1, part 7, division 2, of the Labor Code.

26.3.4 Any Work necessary to be performed after regular working hours, or on Sundays or other holidays shall be performed without additional expense to the District.

26.4 Payroll Records

26.4.1 Contractor shall upload, and shall cause each Subcontractor performing any portion of the Work under this Contract to upload, an accurate and complete certified payroll record ("CPR") electronically using DIR's eCPR System by uploading the CPRs by electronic XML file or entering each record manually using the DIR's iform (or current form) online on a weekly basis and within ten (10 days of any request by the District or Labor Commissioner at http://www.dir.ca.gov/Public-Works/Certified-Payroll-Reporting.html or current application and URL, showing the name, address, social security number, work classification, straight-time, and overtime hours worked each day and week, and the actual per diem wages paid to each journeyman, apprentice, worker, or other employee employed by the Contractor and/or each Subcontractor in connection with the Work.

26.4.1.1 The CPRs enumerated hereunder shall be filed directly with the DIR on a weekly basis or to the requesting party, whether the District or DIR, within ten (10) days after receipt of each written request. The CPRs from the Contractor and each Subcontractor for each week shall be provided on or before Wednesday of the week following the week covered by the CPRs. District may not make any payment to Contractor until:

26.4.1.1.1 Contractor and/or its Subcontractor(s) provide CPRs acceptable to the DIR; and

26.4.1.1.2 Any delay in Contractor and/or its Subcontractor(s) providing CPRs to the DIR in a timely manner may directly delay Contractor's payment.

26.4.2 All CPRs shall be available for inspection at all reasonable hours at the principal office of Contractor on the following basis:

26.4.2.1 A certified copy of an employee's CPR shall be made available for inspection or furnished to the employee or his/her authorized representative on request.

26.4.2.2 CPRs shall be made available for inspection or furnished upon request to a representative of District, Division of Labor Standards Enforcement, Division of Apprenticeship Standards, and/or the DIR.

26.4.2.3 CPRs shall be made available upon request by the public for inspection or copies thereof made; provided, however, that a request by the public shall be made through the District, Division of Apprenticeship Standards, or the Division of Labor Standards Enforcement. If the requested CPRs have not been provided pursuant to the provisions herein, the requesting party shall, prior to being provided the records, reimburse the costs of preparation by Contractor, Subcontractors, and the entity through which the request was made. The public shall not be given access to the records at the principal office of Contractor.

26.4.3 Any copy of records made available for inspection as copies and furnished upon request to the public or any public agency by District, Division of Apprenticeship Standards, or Division of Labor Standards Enforcement shall be marked or obliterated in such a manner as to prevent disclosure of an individual's name, address, and social security number. The name and address of Contractor awarded Contract or performing Contract shall not be marked or obliterated.

26.4.4 Contractor shall inform District of the location of the records enumerated hereunder, including the street address, city, and county, and shall, within five (5) working days, provide a notice of change of location and address.

26.4.5 In the event of noncompliance with the requirements of this section, Contractor shall have ten (10) days in which to comply subsequent to receipt of written notice specifying in what respects Contractor must comply with this section. Should noncompliance still be evident after the ten (10) day period, Contractor shall, as a penalty to District, forfeit up to one hundred dollars ($100) for each calendar day, or portion thereof, for each worker, until strict compliance is effectuated. Upon the request of the Labor Commissioner, these penalties shall be withheld from progress payments then due.

26.4.6 [RESERVED]

26.5 [RESERVED]

26.6 Apprentices

26.6.1 Contractor acknowledges and agrees that, if this Contract involves a dollar amount greater than or a number of working days greater than that specified in Labor Code section 1777.5, then this Contract is governed by the provisions of Labor Code Section 1777.5. It shall be the responsibility of Contractor to ensure compliance with this Article and with Labor Code section 1777.5 for all apprenticeship occupations.

26.6.2 Apprentices of any crafts or trades may be employed and, when required by Labor Code section 1777.5, shall be employed provided they are properly registered in full compliance with the provisions of the Labor Code.

26.6.3 Every such apprentice shall be paid the standard wage paid to apprentices under the regulations of the craft or trade at which he/she is employed, and shall be employed only at the work of the craft or trade to which she/he is registered.

26.6.4 Only apprentices, as defined in section 3077 of the Labor Code, who are in training under apprenticeship standards and written apprentice agreements under chapter 4 (commencing at section 3070), division 3, of the Labor Code, are eligible to be employed. The employment and training of each apprentice shall be in accordance with the provisions of the apprenticeship standards and apprentice agreements under which he/she is training.

26.6.5 Pursuant to Labor Code section 1777.5, if that section applies to this Contract as indicated above, Contractor and any Subcontractors employing workers in any apprenticeable craft or trade in performing any Work under this Contract shall apply to the applicable joint apprenticeship committee for a certificate approving the Contractor or Subcontractor under the applicable apprenticeship standards and fixing the ratio of apprentices to journeymen employed in performing the Work.

26.6.6 Pursuant to Labor Code section 1777.5, if that section applies to this Contract as indicated above, Contractor and any Subcontractor may be required to make contributions to the apprenticeship program.

26.6.7 If Contractor or Subcontractor willfully fails to comply with Labor Code section 1777.5, then, upon a determination of noncompliance by the Administrator of Apprenticeship, it shall:

26.6.7.1 Be denied the right to bid on any subsequent project for one (1) year from the date of such determination;

26.6.7.2 Forfeit as a penalty to District the full amount as stated in Labor Code section 1777.7. Interpretation and enforcement of these provisions shall be in accordance with the rules and procedures of the California Apprenticeship Council and under the authority of the Chief of the Division of Apprenticeship Standards.

26.6.8 Contractor and all Subcontractors shall comply with Labor Code section 1777.6, which section forbids certain discriminatory practices in the employment of apprentices.

26.6.9 Contractor shall become fully acquainted with the law regarding apprentices prior to commencement of the Work. Special attention is directed to sections 1777.5, 1777.6, and 1777.7 of the Labor Code, and title 8, California Code of Regulations, section 200 et seq. Questions may be directed to the State Division of Apprenticeship Standards, 455 Golden Gate Avenue, 9th floor, San Francisco, California 94102.

26.7 Non-Discrimination

26.7.1 Contractor herein agrees to comply with the provisions of the California Fair Employment and Housing Act as set forth in part 2.8 of division 3 of the

California Government Code, commencing at section 12900; the Federal Civil Rights Act of 1964, as set forth in Public Law 88-352, and all amendments thereto; Executive Order 11246; and all administrative rules and regulations found to be applicable to Contractor and Subcontractor.

26.7.2 Special requirements for Federally Assisted Construction Contracts: During the performance of this Contract, Contractor agrees to incorporate in all subcontracts the provisions set forth in Chapter 60-1.4(b) of Title 41 published in Volume 33 No. 104 of the Federal Register dated May 28, 1968.

26.8 Labor First Aid

Contractor shall maintain emergency first aid treatment for Contractor's workers on the Project which complies with the Federal Occupational Safety and Health Act of 1970 (29 U.S.C. § 651 et seq.) and the California Occupational Safety and Health Act of 1973 (Lab. Code, § 6300 et seq.; 8 Cal. Code of Regs., § 330 et seq.).

27. [RESERVED]

28. MISCELLANEOUS

28.1 Assignment of Antitrust Actions

28.1.1 Section 7103.5(b) of the Public Contract Code states:

In entering into a public works contract or subcontract to supply goods, services, or materials pursuant to a public works contract, the Contractor or subcontractor offers and agrees to assign to the awarding body all rights, title, and interest in and to all causes of action it may have under Section 4 of the Clayton Act (15 U.S.C. Sec. 15) or under the Cartwright Act (Chapter 2 (commending with Section 16700) of Part 2 of Division 7 of the Business and Professions Code), arising from purchases of goods, which assignment shall be made and become effective at the time the awarding body tenders final payment to the Contractor, without further acknowledgment by the parties.

28.1.2 Section 4552 of the Government Code states:

In submitting a bid to a public purchasing body, the bidder offers and agrees that if the bid is accepted, it will assign to the purchasing body all rights, title, and interest in and to all causes of action it may have under Section 4 of the Clayton Act (15 U.S.C. Sec. 15) or under the Cartwright Act (Chapter 2 (commencing with Section 16700) of Part 2 of Division 7 of the Business and Professions Code), arising from purchases of goods, materials, or services by the bidder for sale to the purchasing body pursuant to the bid. Such assignment shall be made and become effective at the time the purchasing body tenders final payment to the bidder.

28.1.3 Section 4553 of the Government Code states:

If an awarding body or public purchasing body receives, either through judgment or settlement, a monetary recovery for a cause of action assigned under this chapter, the assignor shall be entitled to receive reimbursement for actual legal costs incurred and may, upon demand, recover from the public body any portion of the recovery, including treble damages, attributable to overcharges that were paid by the assignor

but were not paid by the public body as part of the bid price, less the expenses incurred in obtaining that portion of the recovery.

28.1.4 Section 4554 of the Government Code states:

Upon demand in writing by the assignor, the assignee shall, within one year from such demand, reassign the cause of action assigned under this part if the assignor has been or may have been injured by the violation of law for which the cause of action arose and (a) the assignee has not been injured thereby, or (b) the assignee declines to file a court action for the cause of action.

28.1.5 Under this Article, "public purchasing body" is District and "bidder" is Contractor.

28.2 Excise Taxes

If, under Federal Excise Tax Law, any transaction hereunder constitutes a sale on which a Federal Excise Tax is imposed and the sale is exempt from such Federal Excise Tax because it is a sale to a State or Local Government for its exclusive use, District, upon request, will execute documents necessary to show (1) that District is a political subdivision of the State for the purposes of such exemption, and (2) that the sale is for the exclusive use of District. No Federal Excise Tax for such materials shall be included in any Contract Price.

28.3 Taxes

Contract Price is to include any and all applicable sales taxes or other taxes that may be due in accordance with section 7051 et seq. of the Revenue and Taxation Code, Regulation 1521 of the State Board of Equalization or any other tax code that may be applicable.

28.4 Shipments

All shipments must be F.O.B. destination to Site or sites, as indicated in the Contract Documents. There must be no charge for containers, packing, unpacking, drayage, or insurance. The total Contract Price shall be all inclusive (including sales tax) and no additional costs of any type will be considered.

28.5 Compliance with Government Reporting Requirements

If this Contract is subject to federal or other governmental reporting requirements because of federal or other governmental financing in whole or in part for the Project of which it is part, or for any other reason, Contactor shall comply with those reporting requirements at the request of the District at no additional cost.

END OF DOCUMENT

DOCUMENT 00 73 13

SPECIAL CONDITIONS

THIS DOCUMENT MUST BE ADAPTED FOR EACH PROJECT – Delete any provision that is not applicable or if no change from the provision in the General Conditions.

*** THIS LIST OF SPECIAL CONDITION PROVISIONS IS FOR REFERENCE ONLY. REMOVE THIS PAGE BEFORE USING THIS DOCUMENT. ***

1. Mitigation Measures
2. Modernization Projects
3. Badge Policy for Contractors
4. Substitution for Specified Items
5. Weather Days
7. Insurance Policy Limits
8. Permits, Certificates, Licenses, Fees, Approval
9. Project Labor Agreement/Payroll Records
10. As-Builts and Record Drawings
11. Fingerprinting
12. Disabled Veteran Business Enterprises (if applicable)
13. Construction Manager
14. Program Manager
15. Federal Funds
16. Preliminary Schedule of Values

DOCUMENT 00 73 13

SPECIAL CONDITIONS

29. Mitigation Measures

Contractor shall comply with all applicable mitigation measures, if any, adopted by any public agency with respect to this Project pursuant to the California Environmental Quality Act. (Public Resources Code section 21000 *et seq*.)

30. Modernization Projects

a. Access. Access to the school buildings and entry to buildings, classrooms, restrooms, mechanical rooms, electrical rooms, or other rooms, for construction purposes, must be coordinated with District and onsite District personnel before Work is to start. Unless agreed to otherwise in writing, only a school custodian will be allowed to unlock and lock doors in existing building(s). The custodian will be available only while school is in session. If a custodian is required to arrive before 7:00 a.m. or leave after 3:30 p.m. to accommodate Contractor's Work, the overtime wages for the custodian will be paid by the Contractor, unless at the discretion of the District, other arrangements are made in advance.

b. Keys. Upon request, the District may, at its own discretion, provide keys to the school site for the convenience of the Contractor. The Contractor agrees to pay all expenses to re-key the entire school site and all other affected District buildings if the keys are lost or stolen, or if any unauthorized party obtains a copy of the key or access to the school.

c. Maintaining Services. The Contractor is advised that Work is to be performed in spaces regularly scheduled for instruction. Interruption and/or periods of shutdown of public access, electrical service, water service, lighting, or other utilities shall be only as arranged in advance with the District. Contractor shall provide temporary services to all facilities interrupted by Contractor's Work.

d. Maintaining Utilities. The Contractor shall maintain in operation during duration of Contract, drainage lines, storm drains, sewers, water, gas, electrical, steam, and other utility service lines within working area.

e. Confidentiality. Contractor shall maintain the confidentiality of all information, documents, programs, procedures and all other items that Contractor encounters while performing the Work. This requirement shall be ongoing and shall survive the expiration or termination of this Contract and specifically includes, without

limitation, all student, parent, and employee disciplinary information and health information.

f. Work during Instructional Time. By submitting its bid, Contractor affirms that Work may be performed during ongoing instruction in existing facilities. If so, Contractor agrees to cooperate to the best of its ability to minimize any disruption to school operations and any use of school facilities by the public up to, and including, rescheduling specific work activities, at no additional cost to District.

g. No Work during Student Testing. Contractor shall, at no additional cost to the District and at the District's request, coordinate its Work to not disturb District students including, without limitation, not performing any Work when students at the Site are taking State or Federally-required tests.

31. Badge Policy for Contractors

All Contractors doing work for the District will provide their workers with identification badges. These badges will be worn by all members of the Contractor's staff who are working in a District facility.

a. Badges must be filled out in full and contain the following information:

31.1.1 Name of Contractor

31.1.2 Name of Employee

31.1.3 Contractor's address and phone number

b. Badges are to be worn when the Contractor or his/her employees are on site and must be visible at all times. Contractors must inform their employees that they are required to allow District employees, the Architect, the Construction Manager, the Program Manager, or the Project Inspector to review the information on the badges upon request.

c. Continued failure to display identification badges as required by this policy may result in the individual being removed from the Project or assessment of fines against the Contractor.

32. Substitution for Specified Items

a. Whenever in the Specifications any materials, process, or article is indicated or specified by grade, patent, or proprietary name, or by name of manufacturer, that Specification shall be deemed to be followed by the words "or equal." Contractor may, unless otherwise stated, offer any material, process, or article that shall be

substantially equal or better in every respect to that so indicated or specified.

32.1.1 If the material, process, or article offered by Contractor is not, in the opinion of the District, substantially equal or better in every respect to that specified, then Contractor shall furnish the material, process, or article specified in the Specifications without any additional compensation or change order.

32.1.2 This provision shall not be applicable with respect to any material, product, thing or service for which District made findings and gave notice in accordance with Public Contract Code section 3400(c); therefore, Contractor shall not be entitled to request a substitution with respect to those materials, products or services.

b. A request for a substitution shall be submitted as follows:

32.1.3 Contractor shall notify the District in writing of any request for a substitution at least ten (10) days prior to bid opening as indicated in the Instructions to Bidders.

32.1.4 Requests for Substitutions after award of the Contract shall be submitted within thirty-five (35) days of the date of the Notice of Award.

c. Within 35 days after the date of the Notice of Award, Contractor shall provide data substantiating a request for substitution of "an equal" item, including but not limited to the following:

32.1.5 All variations of the proposed substitute from the material specified including, but not limited to, principles of operation, materials, or construction finish, thickness or gauge of materials, dimensions, weight, and tolerances;

32.1.6 Available maintenance, repair or replacement services;

32.1.7 Increases or decreases in operating, maintenance, repair, replacement, and spare parts costs;

32.1.8 Whether or not acceptance of the substitute will require other changes in the Work (or in work performed by the District or others under Contract with the District); and

32.1.9 The time impact on any part of the Work resulting directly or indirectly from acceptance of the proposed substitute.

d. No substitutions shall be made until approved, in writing, by the District. The burden of proof as to equality of any material, process, or article shall rest with Contractor. The Contractor warrants that if substitutes are approved:

32.1.10 The proposed substitute is equal or superior in all respects to that specified, and that such proposed substitute is suitable and fit for the intended purpose and will perform adequately the function and achieve the results called for by the general design and the Contract Documents;

32.1.11 The Contractor provides the same warranties and guarantees for the substitute that would be provided for that specified;

32.1.12 The Contractor shall be fully responsible for the installation of the substitute and any changes in the Work required, either directly or indirectly, because of the acceptance of such substitute, with no increase in Contract Price or Contract Time. Incidental changes or extra component parts required to accommodate the substitute will be made by the Contractor without a change in the Contract Price or Contract Time;

32.1.13 The Contractor shall be responsible for any re-design costs occasioned by District's acceptance and/or approval of any substitute; and

32.1.14 The Contractor shall, in the event that a substitute is less costly than that specified, credit the District with one hundred percent (100%) of the net difference between the substitute and the originally specified material. In this event, the Contractor agrees to execute a deductive Change Order to reflect that credit.

e. In the event Contractor furnishes a material, process, or article more expensive than that specified, the difference in the cost of that material, process, or article so furnished shall be borne by Contractor.

f. In no event shall the District be liable for any increase in Contract Price or Contract Time due to any claimed delay in the evaluation of any proposed substitute or in the acceptance or rejection of any proposed substitute.

g. Contractor shall be responsible for any costs the District incurs for professional services, DSA fees, or delay to the Project Schedule, if applicable, while DSA reviews changes for the convenience of Contractor and/or to accommodate Contractor's means and methods. District may deduct those costs from any amounts owing to the Contractor for the review of the request for substitution, even if the request for substitution is not approved. District, at its sole discretion, shall deduct from the payments due to and/or invoice Contractor for all the professional services and/or DSA fees or delay to the Project Schedule, if applicable, while DSA reviews changes for the convenience of Contractor and/or to accommodate Contractor's means and methods arising herein.

33. Weather Days

Delays due to Adverse Weather conditions will only be permitted in compliance with the provisions in the General Conditions and only if the number of days of Adverse Weather exceeds the following parameters and Contractor can verify that the excess days of Adverse Weather caused delays:

January	**6**	July	**0**
February	**7**	August	**0**
March	**5**	September	**1**
April	**3**	October	**2**
May	**2**	November	**2**
June	**1**	December	**4**

34. Insurance Policy Limits

All of Contractor's insurance shall be with insurance companies with an A.M. Best rating of no less than A-VII. The limits of insurance shall not be less than:

Commercial General Liability	Product Liability and Completed Operations, Fire Damage Liability – Split Limit	Low Risk: $1,000,000 per occurrence; $2,000,000 aggregate
Automobile Liability – Any Auto	Combined Single Limit	Personal vehicles: $500,000 Commercial vehicles: $1,000,000
		Personal vehicles: $100,000 per person/ $300,000 per accident
Workers' Compensation		Statutory limits pursuant to State law
Pollution Liability		$2,000,000 per occurrence; $4,000,000 aggregate

35. Permits, Certificates, Licenses, Fees, Approvals

a. Payment for Permits, Certificates, Licenses, Fees, and Approvals. As required in the General Conditions, the Contractor shall secure and pay for all permits, licenses, approvals, and certificates necessary for the prosecution of the Work with the exception of the following:

35.1.1 _____

With respect to the above-listed items, Contractor shall be responsible for securing such items; however, District will be responsible for payment of these charges or fees. Contractor shall notify the District of the amount due with respect to such items and to whom the amount is payable. Contractor shall provide the District with an invoice and receipt with respect to such charges or fees.

b. **General Permit For Storm Water Discharges Associated With Construction and Land Disturbance Activities**

35.1.2 Contractor acknowledges that all California school districts are obligated to develop and implement the following requirements for the discharge of storm water to surface waters from its construction and land disturbance activities (storm water requirements), without limitation:

35.1.2.1 Municipal Separate Storm Sewer System (MS4) is a system of conveyances used to collect and/or convey storm water, including, without

limitation, catch basins, curbs, gutters, ditches, man-made channels, and storm drains.

35.1.2.2 Storm Water Pollution Prevention Plan ("SWPPP") contains specific best management practices ("BMPs") and establishes numeric effluent limitations at:

35.1.2.2.1 Sites where the District engages in maintenance (e.g., fueling, cleaning, repairing) for transportation activities.

35.1.2.2.2 Construction sites where:

35.1.2.2.2.1 One (1) or more acres of soil will be disturbed, or

35.1.2.2.2.2 The project is part of a larger common plan of development that disturbs more than one (1) acre of soil.

35.1.3 Contractor shall comply with any District storm water requirements that are approved by the District and applicable to the Project, at no additional cost to the District.

35.1.4 At no additional cost to the District, Contractor shall provide a Qualified Storm Water Practitioner who shall be onsite and implement and monitor any and all SWPPP requirements applicable to the Project, including but not limited to:

35.1.4.1 At least forty eight (48) hours prior to a forecasted rain event, implementing the Rain Event Action Plan (REAP) for any rain event requiring implementation of the REAP, including any erosion and sediment control measures needed to protect all exposed portions of the site; and

35.1.4.2 Monitoring any Numeric Action Levels (NALs), if applicable.

36. Project Labor Agreement/Payroll Records

The District has entered into a Project Labor Agreement ("PLA"), which covers this Project. Accordingly, the following provision is added as Section 26.4.6:

26.4.6 As Contractor and its subcontractors have agreed to be bound by the terms of the PLA entered into by the District [on or about / dated] _____, Contractor and its subcontractors may be excused from uploading CPRs electronically using DIR's eCPR System by uploading the CPRs by electronic XML file or entering each record manually using the DIR's iform (or current form) online at http://www.dir.ca.gov/Public-Works/Certified-Payroll-Reporting.html , or by using a more current application and URL. However, within ten (10) days of any request by the District or Labor Commissioner, Contractor and its subcontractors shall provide CPRs showing the name, address, social security number, work classification, straight time, and overtime hours worked each day and week, and the actual per diem wages paid to each journeyman, apprentice,

worker, or other employee employed by the Contractor and/or each subcontractor in connection with the Work.

37. As-Builts and Record Drawings

37.1 Contractor shall submit Record Drawings pursuant to the Contract Documents consisting of one set of computer-aided design and drafting ("CADD") files in the following format PDF.

38. Fingerprinting

Contractor shall comply with the provisions of Education Code section 45125.2 regarding the submission of employee fingerprints to the California Department of Justice and the completion of criminal background investigations of its employees, its subcontractor(s), and its subcontractors' employees. Contractor shall not permit any employee to have any contact with District pupils until such time as Contractor has verified in writing to the governing board of the District, that such employee has not been convicted of a violent or serious felony, as defined in Education Code section 45122.1. Contractor shall fully complete and perform all tasks required pursuant to the Criminal Background Investigation/ Fingerprinting Certification.

39. Construction Manager

The District will use a Construction Manager on the Project that is the subject of this Contract. Annie Aung is the Construction Manager for this Project.

40. Program Manager

Luis Torres is the Program Manager designated for the Project that is the subject of this Contract.

41. Federal Funds

As this Project is funded in whole or in part by federal funds, Contractor and all Subcontractors are subject to civil or criminal prosecution for any violation of the federal False Claims Act set forth under section 1001 of title 18 and section 231 of title 31 of the United States Code.

The following provisions are added as Section 27 of the General Conditions:

27. FEDERAL LABOR, WAGE & HOUR, APPRENTICE, AND RELATED PROVISIONS

a. Minimum Wages

The Davis-Bacon Act and 29 CFR parts 1 through 7 shall apply if the Project is financed in whole or in part from Federal funds or in accordance with guarantees of a Federal agency or financed from funds obtained by pledge of any contract of a Federal agency to make a loan, grant or annual contribution.

41.1.1 All laborers and mechanics employed or working upon the Site of the Work (or under the United States Housing Act of 1937 or under the Housing Act of 1949 in the construction or development of the Project), will be paid unconditionally

and not less often than once a week, and without subsequent deduction or rebate on any account, except such payroll deductions as are permitted by regulations issued by the Secretary of Labor under the Copeland Act (29 CFR part 3) , the full amount of wages and bona fide fringe benefits, or cash equivalents thereof, due at time of payment computed at rates not less than those contained in the applicable wage determination of the Secretary of Labor regardless of any contractual relationship which may be alleged to exist between the Contractor and such laborers and mechanics.

Contributions made or costs reasonably anticipated for bona fide fringe benefits under section 1(b)(2) of the Davis-Bacon Act on behalf of laborers or mechanics are considered wages paid to such laborers or mechanics, subject to the provisions of this section, including but not limited to paragraph 27.1.7; also, regular contributions made or costs incurred for more than a weekly period, but not less often than quarterly, under plans, funds, or programs which cover the particular weekly period, are deemed to be constructively made or incurred during such weekly period. Such laborers and mechanics shall be paid the appropriate wage rate and fringe benefits on the wage determination for the classification of Work actually performed, without regard to skill, except as provided in 29 CFR 5.5(a)(4). Laborers or mechanics performing Work in more than one classification may be compensated at the rate specified for each classification for the time actually worked therein: Provided, that the employer's payroll records accurately set forth the time spent in each classification in which Work is performed. The wage determination including any additional classification and wage rates conformed under this section, including but not limited to paragraph 27.1.6 and the Davis-Bacon poster (WH-1321) shall be posted at all times by the Contractor and its Subcontractors at the Site of the Work in a prominent and accessible place where it can be easily seen by the workers.

41.1.2 Any class of laborers or mechanics, including helpers, and which is to be employed under the Contract which is not listed in the wage determination shall be classified in conformance with the wage determination. An additional classification and wage rate and fringe benefits will not be approved unless when the following criteria have been met:

(1) The Work to be performed by the classification requested is not performed by a classification in the wage determination; and

41.1.2.1 The classification is utilized in the area by the construction industry; and

41.1.2.2 The proposed wage rate, including any bona fide fringe benefits, bears a reasonable relationship to the wage rates contained in the wage determination.

41.1.3 If the Contractor and the laborers and mechanics to be employed in the classification (if known), or their representatives, and the District agree on the classification and wage rate (including the amount designated for fringe benefits where appropriate), a report of the action taken shall be sent by the Contractor to the Administrator of the Wage and Hour Division, Employment Standards Administration, U.S. Department of Labor, Washington, DC 20210.

41.1.4 In the event the Contractor, the laborers or mechanics to be employed in the classification or their representatives, and the District do not agree on the proposed classification and wage rate (including the amount designated for fringe

benefits, where appropriate), the Contractor shall provide the questions, including the views of all interested parties and the recommendation of the District, to the District for the District's review and referral to the Administrator for determination.

41.1.5 The wage rate (including fringe benefits where appropriate) determined pursuant to this section, shall be paid to all workers performing Work in the classification under this Contract from the first day on which Work is performed in the classification.

41.1.6 Whenever the minimum wage rate prescribed in any applicable wage determination for a class of laborers or mechanics includes a fringe benefit which is not expressed as an hourly rate, Contractor shall either pay the benefit as stated in the wage determination or shall pay another bona fide fringe benefit or an hourly cash equivalent thereof.

41.1.7 If the Contractor does not make payments to a trustee or other third person, the Contractor may consider, as part of the wages of any laborer or mechanic, the amount of any costs reasonably anticipated in providing bona fide fringe benefits under a plan or program, provided that the Secretary of Labor has found, upon the written request of the Contractor, that the applicable standards of the Davis-Bacon Act have been met. If the Secretary of Labor so requires, the Contractor shall set aside in a separate account sufficient assets to meet obligations under the plan or program.

41.2 Withholding. District may, upon its own action or upon written request of an authorized representative of the Department of Labor, withhold or cause to be withheld from the Contractor under this Contract or any other Federal contract with the same Contractor, or any other federally-assisted contract subject to Davis-Bacon prevailing wage requirements, which is held by the same Contractor, so much of the accrued payments or advances as may be considered necessary to pay laborers and mechanics, including apprentices, trainees, and helpers, employed by the Contractor or any Subcontractor the full amount of wages required by the Contract. In the event of Contractor's or any Subcontractors' failure to pay any laborer or mechanic, including any apprentice, trainee, or helper, employed or working on the Site of the Work (or under the United States Housing Act of 1937 or under the Housing Act of 1949 in the construction or development of the project), all or part of the wages required by the Contract, the District may, after written notice to the Contractor, sponsor, applicant, or owner, take such action as it deems necessary to cause the suspension of any further payment, advance, or guarantee of funds until such violations have ceased.

41.3 Payrolls and basic records.

41.3.1 Payrolls and basic records relating thereto shall be maintained by the Contractor during the course of the Work and preserved for a period of three years thereafter for all laborers and mechanics working at the Site of the Work (or under the United States Housing Act of 1937, or under the Housing Act of 1949, in the construction or development of the project). Such records shall contain the name, address, and social security number of each worker, his or her correct classification, hourly rates of wages paid (including rates of contributions or costs anticipated for bona fide fringe benefits or cash equivalents thereof of the types described in section

1(b)(2)(B) of the Davis-Bacon Act), daily and weekly number of hours worked, deductions made and actual wages paid. Whenever the Secretary of Labor has found under 29 CFR 5.5(a)(1)(iv) that the wages of any laborer or mechanic include the amount of any costs reasonably anticipated in providing benefits under a plan or program described in section 1(b)(2)(B) of the Davis-Bacon Act, the Contractor shall maintain records that show that the commitment to provide such benefits is enforceable, that the plan or program is financially responsible, and that the plan or program has been communicated in writing to the laborers or mechanics affected, and records which show the costs anticipated or the actual cost incurred in providing such benefits. Contractors employing apprentices or trainees under approved programs shall maintain written evidence of the registration of apprenticeship programs and certification of trainee programs, the registration of the apprentices and trainees, and the ratios and wage rates prescribed in the applicable programs.

41.3.2 The Contractor shall submit weekly for each week in which any Contract Work is performed a copy of all payrolls to the District. The payrolls submitted shall set out accurately and completely all of the information required to be maintained under 29 CFR 5.5(a)(3)(i), except that full social security numbers and home addresses shall not be included on weekly transmittals. Instead the payrolls shall only need to include an individually identifying number for each employee (e.g., the last four digits of the employee's social security number). The required weekly payroll information shall be submitted on a form acceptable to the District. Optional Form WH-347 is available for this purpose from the Wage and Hour Division Web site at https://www.dol.gov/whd/programs/dbra/wh347.htm or its successor site. Contractor is responsible for the submission of copies of payrolls by all Subcontractors. Contractor and Subcontractors shall maintain the full social security number and current address of each covered worker, and shall provide them upon request to the District, the Contractor, or the Wage and Hour Division of the Department of Labor for purposes of an investigation or audit of compliance with prevailing wage requirements. Contractor may require a Subcontractor to provide addresses and social security numbers to the Contractor for its own records, without weekly submission to the District or other government agency

41.3.3 Each payroll submitted shall be accompanied by a "Statement of Compliance," signed by the Contractor or Subcontractor or his or her agent who pays or supervises the payment of the persons employed under the Contract and shall certify the following:

41.3.3.1 That the payroll for the payroll period contains the information required to be provided under 29 CFR 5.5 (a)(3)(ii) of Regulations, 29 CFR part 5,

41.3.3.2 That the appropriate information is being maintained under 29 CFR 5.5 (a)(3)(i) of Regulations, 29 CFR part 5, and

41.3.3.3 That such information is correct and complete;

41.3.3.4 That each laborer or mechanic (including each helper, apprentice, and trainee) employed on the Contract during the payroll period has been paid the full weekly wages earned, without rebate, either directly or indirectly, and

41.3.3.5 That no deductions have been made either directly or indirectly from the full wages earned, other than permissible deductions as set forth in Regulations, 29 CFR part 3;

41.3.3.6 That each laborer or mechanic has been paid not less than the applicable wage rates and fringe benefits or cash equivalents for the classification of Work performed, as specified in the applicable wage determination incorporated into or applicable to the Contract.

41.3.3.7 The weekly submission of a properly executed certification in the form set forth on the reverse side of Optional Form WH-347 shall satisfy the requirement for submission of the "Statement of Compliance" required by paragraph 27.3.3 of this section.

41.3.3.8 The falsification of any of the above certifications may subject the Contractor or one or more Subcontractors to civil or criminal prosecution under section 1001 of title 18 and section 231 of title 31 of the United States Code.

41.3.3.9 The Contractor or Subcontractor shall make the records required under this section available for inspection, copying, or transcription by authorized representatives of the District or the federal Department of Labor, and shall permit representatives to interview employees during working hours on the job. If the Contractor or Subcontractor fails to submit the required records or to make them available, the Federal agency may, after written notice to the Contractor, sponsor, applicant, or owner, take such action as may be necessary to cause the suspension of any further payment, advance, or guarantee of funds. Furthermore, failure to submit the required records upon request or to make such records available may be grounds for debarment action pursuant to 29 CFR 5.12.

41.4 Apprentices and trainees

41.4.1 Apprentices. Apprentices will be permitted to work at less than the predetermined rate for the Work they performed when they are employed pursuant to and individually registered in a bona fide apprenticeship program registered with the U.S. Department of Labor, Employment and Training Administration, Office of Apprenticeship Training, Employer and Labor Services, or with a State Apprenticeship Agency recognized by the Office, or if a person is employed in his or her first ninety (90) days of probationary employment as an apprentice in an eligible apprenticeship program, who is not individually registered in the program, but who has been certified by the Office of Apprenticeship Training, Employer and Labor Services or a State Apprenticeship Agency (where appropriate) to be eligible for probationary employment as an apprentice. The allowable ratio of apprentices to journeymen on the job Site in any craft classification shall not be greater than the ratio permitted to the Contractor as to the entire work force under the registered program. Any worker listed on a payroll at an apprentice wage rate, who is not registered or otherwise employed as stated above, shall be paid not less than the applicable wage rate on the wage determination for the classification of Work actually performed. In addition, any apprentice performing Work on the job Site in excess of the ratio permitted under the registered program shall be paid not less than the applicable wage rate on the wage determination for the Work actually performed. Where a Contractor is performing construction on a project in a locality other than that in which its program is registered, the ratios and wage rates (expressed in percentages of the journeyman's hourly rate) specified in the Contractor's or Subcontractor's registered

program shall be observed. Every apprentice must be paid at not less than the rate specified in the registered program for the apprentice's level of progress, expressed as a percentage of the journeyman hourly rate specified in the applicable wage determination. Apprentices shall be paid fringe benefits in accordance with the provisions of the apprenticeship program. If the apprenticeship program does not specify fringe benefits, apprentices must be paid the full amount of fringe benefits listed on the wage determination for the applicable classification. If the Administrator determines that a different practice prevails for the applicable apprentice classification, fringes shall be paid in accordance with that determination. In the event the Office of Apprenticeship Training, Employer and Labor Services, or a State Apprenticeship Agency recognized by the Office, withdraws approval of an apprenticeship program, the Contractor will no longer be permitted to utilize apprentices at less than the applicable predetermined rate for the Work performed until an acceptable program is approved.

41.4.2 Trainees. Except as provided in 29 CFR 5.16, trainees will not be permitted to Work at less than the predetermined rate for the Work performed unless they are employed pursuant to and individually registered in a program which has received prior approval, evidenced by formal certification by the U.S. Department of Labor, Employment and Training Administration. The ratio of trainees to journeymen on the job Site shall not be greater than permitted under the plan approved by the Employment and Training Administration. Every trainee must be paid at not less than the rate specified in the approved program for the trainee's level of progress, expressed as a percentage of the journeyman hourly rate specified in the applicable wage determination. Trainees shall be paid fringe benefits in accordance with the provisions of the trainee program. If the trainee program does not mention fringe benefits, trainees shall be paid the full amount of fringe benefits listed on the wage determination unless the Administrator of the Wage and Hour Division determines that there is an apprenticeship program associated with the corresponding journeyman wage rate on the wage determination which provides for less than full fringe benefits for apprentices. Any employee listed on the payroll at a trainee rate who is not registered and participating in a training plan approved by the Employment and Training Administration shall be paid not less than the applicable wage rate on the wage determination for the classification of Work actually performed. In addition, any trainee performing Work on the job Site in excess of the ratio permitted under the registered program shall be paid not less than the applicable wage rate on the wage determination for the Work actually performed. In the event the Employment and Training Administration withdraws approval of a training program, the Contractor will no longer be permitted to utilize trainees at less than the applicable predetermined rate for the Work performed until an acceptable program is approved.

41.4.3 Equal employment opportunity. The utilization of apprentices, trainees and journeymen under this part shall be in conformity with the equal employment opportunity requirements of Executive Order 11246, as amended, and 29 CFR part 30.

41.5 Compliance with Copeland Act requirements. Contractor shall comply with the requirements of 29 CFR part 3, which are incorporated by reference in this Contract.

41.6 Subcontracts. The Contractor or Subcontractor shall insert in any subcontracts the clauses contained in 29 CFR 5.5(a)(1) through (10) and

such other clauses as the Federal agency may by appropriate instructions require, and also a clause requiring the Subcontractors to include these clauses in any lower tier subcontracts. The Contractor shall be responsible for the compliance by any Subcontractor or lower tier Subcontractor with all the Contract clauses in 29 CFR 5.5.

41.7 Contract termination: debarment. A breach of the Contract clauses in 29 CFR 5.5 may be grounds for termination of the Contract, and for debarment as a Contractor and a Subcontractor as provided in 29 CFR 5.12.

41.8 Compliance with Davis-Bacon and Related Act requirements. All rulings and interpretations of the Davis-Bacon and Related Acts contained in 29 CFR parts 1, 3, and 5 are herein incorporated by reference in this Contract.

41.9 Disputes concerning labor standards. Disputes arising out of the labor standards provisions of this Contract shall not be subject to the general disputes clause of this Contract. Such disputes shall be resolved in accordance with the procedures of the Department of Labor set forth in 29 CFR parts 5, 6, and 7. Disputes within the meaning of this clause include disputes between the Contractor (or any of its Subcontractors) and the contracting agency, the U.S. Department of Labor, or the employees or their representatives.

41.10 Certification of eligibility.

41.10.1 By entering into this Contract, the Contractor certifies that neither it (nor he or she) nor any person or firm who has an interest in the Contractor's firm is a person or firm ineligible to be awarded Government contracts by virtue of section 3(a) of the Davis-Bacon Act or 29 CFR 5.12(a)(1).

41.10.2 No part of this Contract shall be subcontracted to any person or firm ineligible for award of a Government contract by virtue of section 3(a) of the Davis-Bacon Act or 29 CFR 5.12(a)(1).

41.10.3 Contractor shall be subject to the penalty for making false statements prescribed in the U.S. Criminal Code, 18 U.S.C. 1001.

41.11 Clauses Mandated by Contract Work Hours and Safety Standards Act.

As used in the following paragraphs, the terms laborers and mechanics include watchmen and guards.

41.11.1 Overtime requirements. No Contractor or Subcontractor contracting for any part of the Contract Work which may require or involve the employment of laborers or mechanics shall require or permit any such laborer or mechanic in any workweek in which he or she is employed on such Work to work in excess of forty hours in such workweek unless such laborer or mechanic receives compensation at a rate not less than one and one-half times the basic rate of pay for all hours worked in excess of forty hours in such workweek.

41.11.2 Violation; liability for unpaid wages; liquidated damages. In the event of any violation of the clause set forth in the foregoing paragraph the Contractor and any Subcontractor responsible therefor shall be liable for the unpaid wages. In addition, such Contractor and Subcontractor shall be liable to the United States for liquidated damages. Such liquidated damages shall be computed with respect to each individual laborer or mechanic, including watchmen and guards, employed in violation of the foregoing paragraph, in the sum of $10 for each calendar day on which such individual was required or permitted to Work in excess of the standard workweek of forty hours without payment of the overtime wages required by the foregoing paragraph.

41.11.3 Withholding for unpaid wages and liquidated damages. The District may upon its own action or upon written request of an authorized representative of the Department of Labor withhold or cause to be withheld, from any moneys payable on account of Work performed by the Contractor or Subcontractor under the Contract or any other Federal contract with the same Contractor, or any other federally-assisted contract subject to the Contract Work Hours and Safety Standards Act, which is held by the same Contractor, such sums as may be determined to be necessary to satisfy any liabilities of such Contractor or Subcontractor for unpaid wages and liquidated damages as provided in the forgoing paragraph.

41.11.4 Subcontracts. The Contractor or Subcontractor shall insert in any subcontracts the foregoing paragraphs concerning "Overtime requirements" and "Violation; liability for unpaid wages; liquidated damages" and also a clause requiring each Subcontractor to include these clauses in any lower tier subcontracts. Contractor shall be responsible for compliance by any Subcontractor or lower tier Subcontractor with the clauses set forth in paragraphs 27.11.1 through 27.11.4 of this section.

16. Preliminary Schedule of Values

The preliminary schedule of values shall include, at a minimum, the following information and the following structure:

Replace provision in the General Conditions with the following provisions:

16.1.1.2.3. The preliminary schedule of values shall not provide for values any greater than the following percentages of the Contract value:

16.1.2.3.1 Mobilization and layout combined to equal not more than **[1]**%;

16.1.1.2.3.2 Submittals, samples and shop drawings combined to equal not more than **[3]**%;

16.1.1.2.3.3 Bonds and insurance combined to equal not more than **[2]**%.

END OF DOCUMENT

DOCUMENT 01 11 00

SUMMARY OF WORK

PART 1 - GENERAL

1.01 RELATED DOCUMENTS AND PROVISIONS

All Contract Documents should be reviewed for applicable provisions related to the provisions in this document, including without limitation:

A. General Conditions, including, without limitation, Site Access Conditions and Requirements;

B. Special Conditions.

1.02 SUMMARY OF WORK COVERED BY CONTRACT DOCUMENTS

A. The Work of this Contract consists of the following:

The scope of work includes but is not limited to the furnishing of all labor, materials, equipment, services and incidentals necessary for asphalt paving including new concrete swales, curbs, and striping as well as the removal of existing paving and swales.

1.03 CONTRACTS

A. Perform the Work under a single, fixed-price Contract.

1.04 CODES, REGULATIONS, AND STANDARDS

A. The codes, regulations, and standards adopted by the state and federal agencies having jurisdiction shall govern minimum requirements for this Project. Where codes, regulations, and standards conflict with the Contract Documents, these conflicts shall be brought to the immediate attention of the District and the Architect.

B. Codes, regulations, and standards shall be as published effective as of date of bid opening, unless otherwise specified or indicated.

1.05 PROJECT RECORD DOCUMENTS

A. Contractor shall maintain on Site one set of the following record documents; Contractor shall record actual revisions to the Work:

(1) Contract Drawings.

(2) Specifications.

(3) Addenda.

(4) Change Orders and other modifications to the Contract.

(5) Reviewed shop drawings, product data, and samples.

(6) Field test records.

(7) Inspection certificates.

(8) Manufacturer's certificates.

B. Contractor shall store Record Documents separate from documents used for construction. Provide files, racks, and secure storage for Record Documents and samples.

C. Contractor shall record information concurrent with construction progress.

D. Specifications: Contractor shall legibly mark and record at each product section of the Specifications the description of the actual product(s) installed, including the following:

(1) Manufacturer's name and product model and number.

(2) Product substitutions or alternates utilized.

(3) Changes made by Addenda and Change Orders and written directives.

1.06 EXAMINATION OF EXISTING CONDITIONS

A. Contractor shall be held to have examined the Project Site and acquainted itself with the conditions of the Site and of the streets or roads approaching the Site.

B. Prior to commencement of Work, Contractor shall survey the Site and existing buildings and improvements to observe existing damage and defects such as cracks, sags, broken, missing or damaged glazing, other building elements and Site improvements, and other damage.

C. Should Contractor observe cracks, sags, and other damage to and defects of the Site and adjacent buildings, paving, and other items not indicated in the Contract Documents, Contractor shall immediately report same to the District and the Architect.

1.07 CONTRACTOR'S USE OF PREMISES

A. If unoccupied and only with District’s prior written approval, Contractor may use the building(s) at the Project Site without limitation for its operations, storage, and office facilities for the performance of the Work. If the District chooses to beneficially occupy any building(s), Contractor must obtain the District's written approval for Contractor's use of spaces and types of operations to be performed within the building(s) while so occupied. Contractor's access to the building(s) shall be limited to the areas indicated.

B. If the space at the Project Site is not sufficient for Contractor's operations, storage, office facilities and/or parking, Contractor shall arrange and pay for any additional facilities needed by Contractor.

C. Contractor shall not interfere with use of or access to occupied portions of the building(s) or adjacent property.

D. Contractor shall maintain corridors, stairs, halls, and other exit-ways of building clear and free of debris and obstructions at all times.

E. No one other than those directly involved in the demolition and construction, or specifically designated by the District or the Architect shall be permitted in the areas of work during demolition and construction activities.

F. The Contractor shall install the construction fence and maintain that it will be locked when not in use. Keys to this fencing will be provided to the District.

1.08 PROTECTION OF EXISTING STRUCTURES AND UTILITIES

A. The Drawings show above-grade and below-grade structures, utility lines, and other installations that are known or believed to exist in the area of the Work. Contractor shall locate these existing installations before proceeding with excavation and other operations that could damage same; maintain them in service, where appropriate; and repair damage to them caused by the performance of the Work. Should damage occur to these existing installations, the costs of repair shall be at the Contractor's expense and made to the District's satisfaction.

B. Contractor shall be alert to the possibility of the existence of additional structures and utilities. If Contractor encounters additional structures and utilities, Contractor will immediately report to the District for disposition of same as indicated in the General Conditions.

1.09 UTILITY SHUTDOWNS AND INTERRUPTIONS

A. Contractor shall give the District a minimum of three (3) days written notice in advance of any need to shut off existing utility services or to effect equipment interruptions. The District will set exact time and duration for shutdown, and will assist Contractor with shutdown. Work required to re-establish utility services shall be performed by the Contractor.

B. Contractor shall obtain District's written approval as indicated in the General Conditions in advance of deliveries of material or equipment or other activities that may conflict with District's use of the building(s) or adjacent facilities.

1.10 STRUCTURAL INTEGRITY

A. Contractor shall be responsible for and supervise each operation and work that could affect structural integrity of various building elements, both permanent and temporary.

B. Contractor shall include structural connections and fastenings as indicated or required for complete performance of the Work.

PART 2 – PRODUCTS Not Used.

PART 3 – EXECUTION Not Used.

END OF DOCUMENT

DOCUMENT 01 25 13

PRODUCT OPTIONS AND SUBSTITUTIONS

PART 4 - GENERAL

4.01 RELATED DOCUMENTS AND PROVISIONS

All Contract Documents should be reviewed for applicable provisions related to the provisions in this document, including without limitation:

A. Instructions to Bidders;

B. General Conditions, including, without limitation, Substitutions For Specified Items; and

C. Special Conditions.

4.02 SUBSTITUTIONS OF MATERIALS AND EQUIPMENT

A. Catalog numbers and specific brands or trade names followed by the designation "or equal" are used in conjunction with material and equipment required by the Specifications to establish the standards of quality, utility, and appearance required. Substitutions which are equal in quality, utility, and appearance to those specified may be reviewed subject to the provisions of the General Conditions.

B. Wherever more than one manufacturer's product is specified, the first-named product is the basis for the design used in the work and the use of alternative-named manufacturers' products or substitutes may require modifications in that design. If such alternatives are proposed by Contractor and are approved by the District and/or the Architect, Contractor shall assume all costs required to make necessary revisions and modifications of the design resulting from the substitutions requested by the Contractor.

C. When materials and equipment are specified by first manufacturer's name and product number, second manufacturer's name and "or approved equal," supporting data for the second product, if proposed by Contractor, shall be submitted in accordance with the requirements for substitutions. The District’s Board has found and determined that certain item(s) shall be used on this Project based on the purpose(s) indicated pursuant to Public Contract Code section 3400(c). These findings, as well as the products and brand or trade names, have been identified in the Notice to Bidders.

D. The Contractor will not be allowed to substitute specified items unless the request for substitution is submitted as follows:

(1) District must receive any notice of request for substitution of a specified item a minimum of ten (10) calendar days prior to bid opening.

(2) Within 35 days after the date of the Notice of Award, the Contractor shall submit data substantiating the request(s) for all substitution(s) containing sufficient information to assess acceptability of product or system and impact on Project, including, without limitation, the requirements specified in the Special Conditions and the technical Specifications. Insufficient information shall be grounds for rejection of substitution.

E. If the District and/or Architect, in reviewing proposed substitute materials and equipment, require revisions or corrections to be made to previously accepted Shop Drawings and supplemental supporting data to be resubmitted, Contractor shall promptly do so. If any proposed substitution is judged by the District and/or Architect to be unacceptable, the specified material or equipment shall be provided.

F. Samples may be required. Tests required by the District and/or Architect for the determination of quality and utility shall be made at the expense of Contractor, with acceptance of the test procedure first given by the District.

G. In reviewing the supporting data submitted for substitutions, the District and/or Architect will use for purposes of comparison all the characteristics of the specified material or equipment as they appear in the manufacturer's published data even though all the characteristics may not have been particularly mentioned in the Contract Documents. If more than two (2) submissions of supporting data are required, the cost of reviewing the additional supporting data shall be borne by Contractor, and the District will deduct the costs from the Contract Price. The Contractor shall be responsible for any re-design costs occasioned by District's acceptance and/or approval of any substitute.

H. The Contractor shall, in the event that a substitute is less costly than that specified, credit the District with one hundred percent (100%) of the net difference between the substitute and the originally specified material. In this event, the Contractor agrees to execute a deductive Change Order to reflect that credit. In the event Contractor furnishes a material, process, or article more expensive than that specified, the difference in the cost of that material, process, or article so furnished shall be borne by Contractor.

I. In no event shall the District be liable for any increase in Contract Price or Contract Time due to any claimed delay in the evaluation of any proposed substitute or in the acceptance or rejection of any proposed substitute.

PART 5 – PRODUCTS Not Used.

PART 6 – EXECUTION Not Used.

END OF DOCUMENT

DOCUMENT 01 25 13

PRODUCT OPTIONS AND SUBSTITUTIONS

PART 7 - GENERAL

7.01 RELATED DOCUMENTS AND PROVISIONS

All Contract Documents should be reviewed for applicable provisions related to the provisions in this document, including without limitation:

A. Instructions to Bidders;

B. General Conditions, including, without limitation, Substitutions For Specified Items; and

C. Special Conditions.

7.02 SUBSTITUTIONS OF MATERIALS AND EQUIPMENT

A. Catalog numbers and specific brands or trade names followed by the designation "or equal" are used in conjunction with material and equipment required by the Specifications to establish the standards of quality, utility, and appearance required. Substitutions which are equal in quality, utility, and appearance to those specified may be reviewed subject to the provisions of the General Conditions.

B. Wherever more than one manufacturer's product is specified, the first-named product is the basis for the design used in the work and the use of alternative-named manufacturers' products or substitutes may require modifications in that design. If such alternatives are proposed by Contractor and are approved by the District and/or the Architect, Contractor shall assume all costs required to make necessary revisions and modifications of the design resulting from the substitutions requested by the Contractor.

C. When materials and equipment are specified by first manufacturer's name and product number, second manufacturer's name and "or approved equal," supporting data for the second product, if proposed by Contractor, shall be submitted in accordance with the requirements for substitutions. The District's Board has found and determined that certain item(s) shall be used on this Project based on the purpose(s) indicated pursuant to Public Contract Code section 3400(c). These findings, as well as the products and brand or trade names, have been identified in the Notice to Bidders.

D. The Contractor will not be allowed to substitute specified items unless the request for substitution is submitted as follows:

(1) District must receive any notice of request for substitution of a specified item a minimum of ten (10) calendar days prior to bid opening.

(2) Within 35 days after the date of the Notice of Award, the Contractor shall submit data substantiating the request(s) for all substitution(s) containing sufficient information to assess acceptability of product or system and impact on Project, including, without limitation, the requirements specified in the Special Conditions and the technical Specifications. Insufficient information shall be grounds for rejection of substitution.

E. If the District and/or Architect, in reviewing proposed substitute materials and equipment, require revisions or corrections to be made to previously accepted Shop Drawings and supplemental supporting data to be resubmitted, Contractor shall promptly do so. If any proposed substitution is judged by the District and/or Architect to be unacceptable, the specified material or equipment shall be provided.

F. Samples may be required. Tests required by the District and/or Architect for the determination of quality and utility shall be made at the expense of Contractor, with acceptance of the test procedure first given by the District.

G. In reviewing the supporting data submitted for substitutions, the District and/or Architect will use for purposes of comparison all the characteristics of the specified material or equipment as they appear in the manufacturer's published data even though all the characteristics may not have been particularly mentioned in the Contract Documents. If more than two (2) submissions of supporting data are required, the cost of reviewing the additional supporting data shall be borne by Contractor, and the District will deduct the costs from the Contract Price. The Contractor shall be responsible for any re-design costs occasioned by District's acceptance and/or approval of any substitute.

H. The Contractor shall, in the event that a substitute is less costly than that specified, credit the District with one hundred percent (100%) of the net difference between the substitute and the originally specified material. In this event, the Contractor agrees to execute a deductive Change Order to reflect that credit. In the event Contractor furnishes a material, process, or article more expensive than that specified, the difference in the cost of that material, process, or article so furnished shall be borne by Contractor.

I. In no event shall the District be liable for any increase in Contract Price or Contract Time due to any claimed delay in the evaluation of any proposed substitute or in the acceptance or rejection of any proposed substitute.

PART 8 – PRODUCTS Not Used.

PART 9 – EXECUTION Not Used.

END OF DOCUMENT

DOCUMENT 01 26 00

CHANGES IN THE WORK

CONTRACTOR SHALL COMPLY WITH ALL APPLICABLE PROVISIONS IN THE AGREEMENT, GENERAL CONDITIONS, AND SPECIAL CONDITIONS, IF USED, RELATED TO CHANGES AND/OR REQUESTS FOR CHANGES.

END OF DOCUMENT

DOCUMENT 01 29 00

APPLICATION FOR PAYMENT AND CONDITIONAL AND UNCONDITIONAL WAIVER AND RELEASE FORMS

CONTRACTOR SHALL COMPLY WITH ALL PROVISIONS IN THE GENERAL CONDITIONS RELATED TO APPLICATIONS FOR PAYMENT AND/OR PAYMENTS.

CONDITIONAL WAIVER AND RELEASE
ON PROGRESS PAYMENT
(CIVIL CODE SECTION 8132)

NOTICE: THIS DOCUMENT WAIVES THE CLAIMANT'S LIEN, STOP PAYMENT NOTICE, AND PAYMENT BOND RIGHTS EFFECTIVE ON RECEIPT OF PAYMENT. A PERSON SHOULD NOT RELY ON THIS DOCUMENT UNLESS SATISFIED THAT THE CLAIMANT HAS RECEIVED PAYMENT.

Name of Claimant: _____

Name of Customer: _____

Job Location: _____

Owner: _____

Through Date: _____

Conditional Waiver and Release

This document waives and releases lien, stop payment notice, and payment bond rights the claimant has for labor and service provided, and equipment and material delivered, to the customer on this job through the Through Date of this document. Rights based upon labor or service provided, or equipment or material delivered, pursuant to a written change order that has been fully executed by the parties prior to the date that this document is signed by the claimant, are waived and released by this document, unless listed as an Exception below. This document is effective only on the claimant's receipt of payment from the financial institution on which the following check is drawn:

Maker of Check: _____

Amount of Check: $_____

Check Payable to: _____

Exceptions

This document does not affect any of the following:

(1) Retentions.

(2) Extras for which the claimant has not received payment.

(3) The following progress payments for which the claimant has previously given a conditional waiver and release but has not received payment:

Date(s) of waiver and release: _____

Amount(s) of unpaid progress payment(s): $_____

(4) Contract rights, including (A) a right based on rescission, abandonment, or breach of contract, and (B) the right to recover compensation for work not compensated by the payment.

Claimant's Signature: _____

Claimant's Title: _____

Date of Signature: _____

UNCONDITIONAL WAIVER AND RELEASE
ON PROGRESS PAYMENT
(CIVIL CODE SECTION 8134)

NOTICE TO CLAIMANT: THIS DOCUMENT WAIVES AND RELEASES LIEN, STOP PAYMENT NOTICE, AND PAYMENT BOND RIGHTS UNCONDITIONALLY AND STATES THAT YOU HAVE BEEN PAID FOR GIVING UP THOSE RIGHTS. THIS DOCUMENT IS ENFORCEABLE AGAINST YOU IF YOU SIGN IT, EVEN IF YOU HAVE NOT BEEN PAID. IF YOU HAVE NOT BEEN PAID, USE A CONDITIONAL WAIVER AND RELEASE FORM.

Name of Claimant: _____

Name of Customer: _____

Job Location: _____

Owner: _____

Through Date: _____

Unconditional Waiver and Release

This document waives and releases lien, stop payment notice, and payment bond rights the claimant has for labor and service provided, and equipment and material delivered, to the customer on this job through the Through Date of this document. Rights based upon labor or service provided, or equipment or material delivered, pursuant to a written change order that has been fully executed by the parties prior to the date that this document is signed by the claimant, are waived and released by this document, unless listed as an Exception below. The claimant has received the following progress payment: $_____

Exceptions

This document does not affect any of the following:

1. Retentions.

(5) Extras for which the claimant has not received payment.

(6) Contract rights, including (A) a right based on rescission, abandonment, or breach of contract, and (B) the right to recover compensation for work not compensated by the payment.

Claimant's Signature: _____

Claimant's Title: _____

Date of Signature: _____

CONDITIONAL WAIVER AND RELEASE
ON FINAL PAYMENT
(CIVIL CODE SECTION 8136)

NOTICE: THIS DOCUMENT WAIVES THE CLAIMANT'S LIEN, STOP PAYMENT NOTICE, AND PAYMENT BOND RIGHTS EFFECTIVE ON RECEIPT OF PAYMENT. A PERSON SHOULD NOT RELY ON THIS DOCUMENT UNLESS SATISFIED THAT THE CLAIMANT HAS RECEIVED PAYMENT.

Name of Claimant: _____

Name of Customer: _____

Job Location: _____

Owner: _____

Conditional Waiver and Release

This document waives and releases lien, stop payment notice, and payment bond rights the claimant has for labor and service provided, and equipment and material delivered, to the customer on this job. Rights based upon labor or service provided, or equipment or material delivered, pursuant to a written change order that has been fully executed by the parties prior to the date that this document is signed by the claimant, are waived and released by this document, unless listed as an Exception below. This document is effective only on the claimant's receipt of payment from the financial institution on which the following check is drawn:

Maker of Check:

Amount of Check: $_____

Check Payable to: _____

Exceptions

This document does not affect any of the following: _____

Disputed claims for extras in the amount of: $_____

Claimant's Signature: _____

Claimant's Title: _____

Date of Signature: _____

UNCONDITIONAL WAIVER AND RELEASE
ON FINAL PAYMENT
(CIVIL CODE SECTION 8138)

NOTICE TO CLAIMANT: THIS DOCUMENT WAIVES AND RELEASES LIEN, STOP PAYMENT NOTICE, AND PAYMENT BOND RIGHTS UNCONDITIONALLY AND STATES THAT YOU HAVE BEEN PAID FOR GIVING UP THOSE RIGHTS. THIS DOCUMENT IS ENFORCEABLE AGAINST YOU IF YOU SIGN IT, EVEN IF YOU HAVE NOT BEEN PAID. IF YOU HAVE NOT BEEN PAID, USE A CONDITIONAL WAIVER AND RELEASE FORM.

Name of Claimant: _____

Name of Customer: _____

Job Location: _____

Owner: _____

Unconditional Waiver and Release

This document waives and releases lien, stop payment notice, and payment bond rights the claimant has for all labor and service provided, and equipment and material delivered, to the customer on this job. Rights based upon labor or service provided, or equipment or material delivered, pursuant to a written change order that has been fully executed by the parties prior to the date that this document is signed by the claimant, are waived and released by this document, unless listed as an Exception below. The claimant has been paid in full.

Exceptions

This document does not affect any of the following: _____

Disputed claims for extras in the amount of: $_____

Claimant's Signature: _____

Claimant's Title: _____

Date of Signature: _____

DOCUMENT 01 31 19

PROJECT MEETINGS

PART 10 – GENERAL

10.01 RELATED DOCUMENTS AND PROVISIONS:

All Contract Documents should be reviewed for applicable provisions related to the provisions in this document, including without limitation:

A. General Conditions; and

B. Special Conditions.

10.02 PROGRESS MEETINGS:

A. Contractor shall schedule and hold regular weekly progress meetings after a minimum of one week's prior written notice of the meeting date and time to all Invitees as indicated below.

B. Location: Contractor's field office.

C. The Contractor shall notify and invite the following entities ("Invitees"):

(1) District Representative.

(2) Contractor.

(3) Contractor's Project Manager.

(4) Contractor's Superintendent.

(5) Subcontractors, as appropriate to the agenda of the meeting.

(6) Suppliers, as appropriate to the agenda of the meeting.

(7) Construction Manager, if any.

(8) Architect

(9) Engineer(s), if any and as appropriate to the agenda of the meeting.

(10) Others, as appropriate to the agenda of the meeting.

D. The District's and/or the Architect's Consultants will attend at their discretion, in response to the agenda.

E. The District representative, the Construction Manager, and/or another District Agent shall take and distribute meeting notes to attendees and other concerned parties. If exceptions are taken to anything in the meeting notes,

those exceptions shall be stated in writing to the District within five (5) working days following District's distribution of the meeting notes.

10.03 PRE-INSTALLATION/PERFORMANCE MEETING:

A. Contractor shall schedule a meeting prior to the start of each of the following portions of the Work: cutting and patching of plaster and roofing, and other weather-exposed and moisture-resistant products. Contractor shall invite all Invitees to this meeting, and others whose work may affect or be affected by the quality of the cutting and patching work.

B. Contractor shall review in detail prior to this meeting, the manufacturer's requirements and specifications, applicable portions of the Contract Documents, Shop Drawings, and other submittals, and other related work. At this meeting, invitees shall review and resolve conflicts, incompatibilities, or inadequacies discovered or anticipated.

C. Contractor shall review in detail Project conditions, schedule, requirements for performance, application, installation, and quality of completed Work, and protection of adjacent Work and property.

D. Contractor shall review in detail means of protecting the completed Work during the remainder of the construction period.

PART 11 - PRODUCTS Not Used.

PART 12 - EXECUTION Not Used.

END OF DOCUMENT

DOCUMENT 01 32 13

SCHEDULING OF WORK

PART 13 – GENERAL

13.01 RELATED DOCUMENTS AND PROVISIONS

All Contract Documents should be reviewed for applicable provisions related to the provisions in this document, including without limitation:

A. General Conditions;

B. Special Conditions;

C. Summary of Work; and

D. Submittals.

13.02 SECTION INCLUDES

A. Scheduling of Work under this Contract shall be performed by Contractor in accordance with requirements of this Section.

(1) Development of schedule, cost and resource loading of the schedule, monthly payment requests, and project status reporting requirements of the Contract shall employ computerized Critical Path Method ("CPM") scheduling ("CPM Schedule").

(2) CPM Schedule shall be cost loaded based on Schedule of Values as approved by District.

(3) Submit schedules and reports as specified in the General Conditions.

B. Upon Award of Contract, Contractor shall immediately commence development of Initial and Original CPM Schedules to ensure compliance with CPM Schedule submittal requirements.

13.03 CONSTRUCTION SCHEDULE

A. Within ten (10) days of being awarded the Contract and before request for first progress payment, the Contractor shall prepare and submit to the Project Manager a construction progress schedule conforming to the Milestone Schedule below.

B. The Construction Schedule shall be continuously updated, and an updated schedule shall be submitted with each application for progress payment. Each revised schedule shall indicate the work actually accomplished during the previous period and the schedule for completion of the remaining work.

C. Milestone Schedule:

ACTIVITY DESCRIPTION	REQUIRED COMPLETION
CONSTRUCTION STARTS	June 6, 2022
FINAL PROJECT COMPLETION	July 31, 2022

13.04 QUALIFICATIONS

A. Contractor shall employ experienced scheduling personnel qualified to use the latest version of [i.e., Primavera Project Planner]. Experience level required is set forth below. Contractor may employ such personnel directly or may employ a consultant for this purpose.

(1) The written statement shall identify the individual who will perform CPM scheduling.

(2) Capability and experience shall be verified by description of construction projects on which individual has successfully applied computerized CPM.

(3) Required level of experience shall include at least two (2) projects of similar nature and scope with value not less than three fourths (¾) of the Total Bid Price of this Project. The written statement shall provide contact persons for referenced projects with current telephone and address information.

B. District reserves the right to approve or reject Contractor's scheduler or consultant at any time. District reserves the right to refuse replacing of Contractor's scheduler or consultant, if District believes replacement will negatively affect the scheduling of Work under this Contract.

13.05 GENERAL

A. Progress Schedule shall be based on and incorporate milestone and completion dates specified in Contract Documents.

B. Overall time of completion and time of completion for each milestone shown on Progress Schedule shall adhere to times in the Contract, unless an earlier (advanced) time of completion is requested by Contractor and agreed to by District. Any such agreement shall be formalized by a Change Order.

(1) District is not required to accept an early completion schedule, i.e., one that shows an earlier completion date than the Contract Time.

(2) Contractor shall not be entitled to extra compensation in event agreement is reached on an earlier completion schedule and Contractor completes its Work, for whatever reason, beyond completion date shown in its early completion schedule but within the Contract Time.

(3) A schedule showing the work completed in less than the Contract Time, and that has been accepted by District, shall be considered to

have Project Float. The Project Float is the time between the scheduled completion of the work and the Completion Date. Project Float is a resource available to both District and the Contractor.

C. Ownership Project Float: Neither the District nor Contractor owns Project Float. The Project owns the Project Float. As such, liability for delay of the Completion Date rests with the party whose actions, last in time, actually cause delay to the Completion Date.

(1) For example, if Party A uses some, but not all of the Project Float and Party B later uses remainder of the Project Float as well as additional time beyond the Project Float, Party B shall be liable for the time that represents a delay to the Completion Date.

(2) Party A would not be responsible for the time since it did not consume the entire Project Float and additional Project Float remained; therefore, the Completion Date was unaffected by Party A.

D. Progress Schedule shall be the basis for evaluating job progress, payment requests, and time extension requests. Responsibility for developing Contract CPM Schedule and monitoring actual progress as compared to Progress Schedule rests with Contractor.

E. Failure of Progress Schedule to include any element of the Work, or any inaccuracy in Progress Schedule, will not relieve Contractor from responsibility for accomplishing the Work in accordance with the Contract. District's acceptance of schedule shall be for its use in monitoring and evaluating job progress, payment requests, and time extension requests and shall not, in any manner, impose a duty of care upon District, or act to relieve Contractor of its responsibility for means and methods of construction.

F. Software: Software shall be compatible with Windows operating system. Contractor shall transmit contract file to District on thumb drive at times requested by District.

G. Transmit each item under the form approved by District.

(1) Identify Project with District Contract number and name of Contractor.

(2) Provide space for Contractor's approval stamp and District's review stamps.

(3) Submittals received from sources other than Contractor will be returned to the Contractor without District's review.

13.06 INITIAL CPM SCHEDULE

A. Initial CPM Schedule submitted for review at the pre-construction conference shall serve as Contractor's schedule for up to ten (10) calendar days after the Notice to Proceed.

B. Indicate detailed plan for the Work to be completed in first ten (10) days of the Contract; details of planned mobilization of plant and equipment;

sequence of early operations; procurement of materials and equipment. Show Work beyond thirty (30) calendar days in summary form.

C. Initial CPM Schedule shall be time scaled.

D. Initial CPM Schedule shall be cost and resource loaded. Accepted cost and resource loaded schedule will be used as basis for monthly progress payments until acceptance of the Original CPM Schedule. Use of Initial CPM Schedule for progress payments shall not exceed thirty (30) calendar days.

E. District and Contractor shall meet to review and discuss the Initial CPM Schedule within seven (7) calendar days after it has been submitted to District.

(1) District's review and comment on the schedule shall be limited to Contract conformance (with sequencing, coordination, and milestone requirements).

(2) Contractor shall make corrections to schedule necessary to comply with Contract requirements and shall adjust schedule to incorporate any missing information requested by District. Contractor shall resubmit Initial CPM Schedule if requested by District.

F. If, during the first thirty (30) after Notice to Proceed, the Contractor is of the opinion that any of the Work included on its Initial CPM Schedule has been impacted, the Contractor shall submit to District a written Time Impact Evaluation ("TIE") in accordance with Article 1.12 of this Section. The TIE shall be based on the most current update of the Initial CPM Schedule.

13.07 ORIGINAL CPM SCHEDULE

A. Submit a detailed proposed Original CPM Schedule presenting an orderly and realistic plan for completion of the Work in conformance with requirements as specified herein.

B. Progress Schedule shall include or comply with following requirements:

(1) Time scaled, cost and resource (labor and major equipment) loaded CPM schedule.

(2) No activity on schedule shall have duration longer than fifteen (15) work days, with exception of submittal, approval, fabrication and procurement activities, unless otherwise approved by District.

(a) Activity durations shall be total number of actual work days required to perform that activity.

(3) The start and completion dates of all items of Work, their major components, and milestone completion dates, if any.

(4) District furnished materials and equipment, if any, identified as separate activities.

(5) Activities for maintaining Project Record Documents.

(6) Dependencies (or relationships) between activities.

(7) Processing/approval of submittals and shop drawings for all material and equipment required per the Contract. Activities that are dependent on submittal acceptance or material delivery shall not be scheduled to start earlier than expected acceptance or delivery dates.

(a) Include time for submittals, re-submittals and reviews by District. Coordinate with accepted schedule for submission of Shop Drawings, samples, and other submittals.

(b) Contractor shall be responsible for all impacts resulting from re-submittal of Shop Drawings and submittals.

(8) Procurement of major equipment, through receipt and inspection at jobsite, identified as separate activity.

(a) Include time for fabrication and delivery of manufactured products for the Work.

(b) Show dependencies between procurement and construction.

(9) Activity description; what Work is to be accomplished and where.

(10) The total cost of performing each activity shall be total of labor, material, and equipment, excluding overhead and profit of Contractor. Overhead and profit of the General Contractor shall be shown as a separate activity in the schedule. Sum of cost for all activities shall equal total Contract value.

(11) Resources required (labor and major equipment) to perform each activity.

(12) Responsibility code for each activity corresponding to Contractor or Subcontractor responsible for performing the Work.

(13) Identify the activities which constitute the controlling operations or critical path. No more than twenty-five (25%) of the activities shall be critical or near critical. Near critical is defined as float in the range of one (1) to (10) days.

(14) Twenty (20) workdays for developing punch list(s), completion of punch-list items, and final clean up for the Work or any designated portion thereof. No other activities shall be scheduled during this period.

(15) Interface with the work of other contractors, District, and agencies such as, but not limited to, utility companies.

(16) Show detailed Subcontractor Work activities. In addition, furnish copies of Subcontractor schedules upon which CPM was built.

(a) Also furnish for each Subcontractor, as determined by District, submitted on Subcontractor letterhead, a statement certifying that Subcontractor concurs with Contractor's Original CPM Schedule and that Subcontractor's related schedules have been incorporated, including activity duration, cost and resource loading.

(b) Subcontractor schedules shall be independently derived and not a copy of Contractor's schedule.

(c) In addition to Contractor's schedule and resource loading, obtain from electrical, mechanical, and plumbing Subcontractors, and other Subcontractors as required by District, productivity calculations common to their trades, such as units per person day, feet of pipe per day per person, feet of wiring per day per person, and similar information.

(d) Furnish schedule for Contractor/Subcontractor CPM schedule meetings which shall be held prior to submission of Original CPM schedule to District. District shall be permitted to attend scheduled meetings as an observer.

(17) Activity durations shall be in Work days.

(18) Submit with the schedule a list of anticipated non-Work days, such as weekends and holidays. The Progress Schedule shall exclude in its Work day calendar all non-Work days on which Contractor anticipates critical Work will not be performed.

C. Original CPM Schedule Review Meeting: Contractor shall, within sixty (60) days from the Notice to Proceed date, meet with District to review the Original CPM Schedule submittal.

(1) Contractor shall have its Project Manager, Project Superintendent, Project Scheduler, and key Subcontractor representatives, as required by District, in attendance. The meeting will take place over a continuous one (1) day period.

(2) District's review will be limited to submittal's conformance to Contract requirements including, but not limited to, coordination requirements. However, review may also include:

(a) Clarifications of Contract Requirements.

(b) Directions to include activities and information missing from submittal.

(c) Requests to Contractor to clarify its schedule.

(3) Within five (5) days of the Schedule Review Meeting, Contractor shall respond in writing to all questions and comments expressed by District at the Meeting.

13.08 ADJUSTMENTS TO CPM SCHEDULE

A. Adjustments to Original CPM Schedule: Contractor shall have adjusted the Original CPM Schedule submittal to address all review comments from original CPM Schedule review meeting and resubmit network diagrams and reports for District's review.

(1) District, within ten (10) days from date that Contractor submitted the revised schedule, will either:

(a) Accept schedule and cost and resource loaded activities as submitted, or

(b) Advise Contractor in writing to review any part or parts of schedule which either do not meet Contract requirements or are unsatisfactory for District to monitor Project's progress, resources, and status or evaluate monthly payment request by Contractor.

(2) District may accept schedule with conditions that the first monthly CPM Schedule update be revised to correct deficiencies identified.

(3) When schedule is accepted, it shall be considered the "Original CPM Schedule" which will then be immediately updated to reflect the current status of the work.

(4) District reserves right to require Contractor to adjust, add to, or clarify any portion of schedule which may later be discovered to be insufficient for monitoring of Work or approval of partial payment requests. No additional compensation will be provided for such adjustments, additions, or clarifications.

B. Acceptance of Contractor's schedule by District will be based solely upon schedule's compliance with Contract requirements.

(1) By way of Contractor assigning activity durations and proposing sequence of Work, Contractor agrees to utilize sufficient and necessary management and other resources to perform work in accordance with the schedule.

(2) Upon submittal of schedule update, updated schedule shall be considered "current" CPM Schedule.

(3) Submission of Contractor's schedule to District shall not relieve Contractor of total responsibility for scheduling, sequencing, and pursuing Work to comply with requirements of Contract Documents, including adverse effects such as delays resulting from ill-timed Work.

C. Submittal of Original CPM Schedule, and subsequent schedule updates, shall be understood to be Contractor's representation that the Schedule meets requirements of Contract Documents and that Work shall be executed in sequence indicated on the schedule.

D. Contractor shall distribute Original CPM Schedule to Subcontractors for review and written acceptance, which shall be noted on Subcontractors' letterheads to Contractor and transmitted to District for the record.

13.09 MONTHLY CPM SCHEDULE UPDATE SUBMITTALS

A. Following acceptance of Contractor's Original CPM Schedule, Contractor shall monitor progress of Work and adjust schedule each month to reflect actual progress and any anticipated changes to planned activities.

(1) Each schedule update submitted shall be complete, including all information requested for the Original CPM Schedule submittal.

(2) Each update shall continue to show all Work activities including those already completed. These completed activities shall accurately reflect "as built" information by indicating when activities were actually started and completed.

B. A meeting will be held on approximately the twenty-fifth (25th) of each month to review the schedule update submittal and progress payment application.

(1) At this meeting, at a minimum, the following items will be reviewed: Percent (%) complete of each activity; Time Impact Evaluations for Change Orders and Time Extension Request; actual and anticipated activity sequence changes; actual and anticipated duration changes; and actual and anticipated Contractor delays.

(2) These meetings are considered a critical component of overall monthly schedule update submittal and Contractor shall have appropriate personnel attend. At a minimum, these meetings shall be attended by Contractor's General Superintendent and Scheduler.

(3) Contractor shall plan on the meeting taking no less than four (4) hours.

C. Within five (5) working days after monthly schedule update meeting, Contractor shall submit the updated CPM Schedule update.

D. Within five (5) work days of receipt of above noted revised submittals, District will either accept or reject monthly schedule update submittal.

(1) If accepted, percent (%) complete shown in monthly update will be basis for Application for Payment by the Contractor. The schedule update shall be submitted as part of the Contractor's Application for Payment.

(2) If rejected, update shall be corrected and resubmitted by Contractor before the Application for Payment is submitted.

E. Neither updating, changing or revising of any report, curve, schedule, or narrative submitted to District by Contractor under this Contract, nor District's review or acceptance of any such report, curve, schedule or narrative shall

have the effect of amending or modifying in any way the Completion Date or milestone dates or of modifying or limiting in any way Contractor's obligations under this Contract.

13.10 SCHEDULE REVISIONS

A. Updating the Schedule to reflect actual progress shall not be considered revisions to the Schedule. Since scheduling is a dynamic process, revisions to activity durations and sequences are expected on a monthly basis.

B. To reflect revisions to the Schedule, the Contractor shall provide District with a written narrative with a full description and reasons for each Work activity revised. For revisions affecting the sequence of work, the Contractor shall provide a schedule diagram which compares the original sequence to the revised sequence of work. The Contractor shall provide the written narrative and schedule diagram for revisions two (2) working days in advance of the monthly schedule update meeting.

C. Schedule revisions shall not be incorporated into any schedule update until the revisions have been reviewed by District. District may request further information and justification for schedule revisions and Contractor shall, within three (3) days, provide District with a complete written narrative response to District's request.

D. If the Contractor's revision is still not accepted by District, and the Contractor disagrees with District's position, the Contractor has seven (7) calendar days from receipt of District's letter rejecting the revision to provide a written narrative providing full justification and explanation for the revision. The Contractor's failure to respond in writing within seven (7) calendar days of District's written rejection of a schedule revision shall be contractually interpreted as acceptance of District's position, and the Contractor waives its rights to subsequently dispute or file a claim regarding District's position.

E. At District's discretion, the Contractor can be required to provide Subcontractor certifications of performance regarding proposed schedule revisions affecting said Subcontractors.

13.11 RECOVERY SCHEDULE

A. If the Schedule Update shows a completion date twenty-one (21) calendar days beyond the Contract Completion Date, or individual milestone completion dates, the Contractor shall submit to District the proposed revisions to recover the lost time within seven (7) calendar days. As part of this submittal, the Contractor shall provide a written narrative for each revision made to recapture the lost time. If the revisions include sequence changes, the Contractor shall provide a schedule diagram comparing the original sequence to the revised sequence of work.

B. The revisions shall not be incorporated into any schedule update until the revisions have been reviewed by District.

C. If the Contractor's revisions are not accepted by District, District and the Contractor shall follow the procedures in paragraph 1.09.C, 1.09.D and 1.09.E above.

D. At District's discretion, the Contractor can be required to provide Subcontractor certifications for revisions affecting said Subcontractors.

13.12 TIME IMPACT EVALUATION ("TIE") FOR CHANGE ORDERS, AND OTHER DELAYS

A. When Contractor is directed to proceed with changed Work, the Contractor shall prepare and submit within fourteen (14) calendar days from the Notice to Proceed a TIE which includes both a written narrative and a schedule diagram depicting how the changed Work affects other schedule activities. The schedule diagram shall show how the Contractor proposes to incorporate the changed Work in the schedule and how it impacts the current schedule-update critical path. The Contractor is also responsible for requesting time extensions based on the TIE's impact on the critical path. The diagram must be tied to the main sequence of schedule activities to enable District to evaluate the impact of changed Work to the scheduled critical path.

B. Contractor shall be required to comply with the requirements of Paragraph 1.09.A for all types of delays such as, but not limited to, Contractor/Subcontractor delays, adverse weather delays, strikes, procurement delays, fabrication delays, etc.

C. Contractor shall be responsible for all costs associated with the preparation of TIEs, and the process of incorporating them into the current schedule update. The Contractor shall provide District with four (4) copies of each TIE.

D. Once agreement has been reached on a TIE, the Contract Time will be adjusted accordingly. If agreement is not reached on a TIE, the Contract Time may be extended in an amount District allows, and the Contractor may submit a claim for additional time claimed by contractor.

13.13 TIME EXTENSIONS

A. The Contractor is responsible for requesting time extensions for time impacts that, in the opinion of the Contractor, impact the critical path of the current schedule update. Notice of time impacts shall be given in accord with the General Conditions.

B. Where an event for which District is responsible impacts the projected Completion Date, the Contractor shall provide a written mitigation plan, including a schedule diagram, which explains how (e.g., increase crew size, overtime, etc.) the impact can be mitigated. The Contractor shall also include a detailed cost breakdown of the labor, equipment, and material the Contractor would expend to mitigate District-caused time impact. The Contractor shall submit its mitigation plan to District within fourteen (14) calendar days from the date of discovery of the impact. The Contractor is responsible for the cost to prepare the mitigation plan.

C. Failure to request time, provide TIE, or provide the required mitigation plan will result in Contractor waiving its right to a time extension and cost to mitigate the delay.

D. No time will be granted under this Contract for cumulative effect of changes.

E. District will not be obligated to consider any time extension request unless the Contractor complies with the requirements of Contract Documents.

F. Failure of the Contractor to perform in accordance with the current schedule update shall not be excused by submittal of time extension requests.

G. If the Contractor does not submit a TIE within the required fourteen (14) calendar days for any issue, it is mutually agreed that the Contractor does not require a time extension for said issue.

13.14 SCHEDULE REPORTS

A. Submit four (4) copies of the following reports with the Initial CPM Schedule, the Original CPM Schedule, and each monthly update.

B. Required Reports:

(1) Two activity listing reports: one sorted by activity number and one by total Project Float. These reports shall also include each activity's early/late and actual start and finish dates, original and remaining duration, Project Float, responsibility code, and the logic relationship of activities.

(2) Cost report sorted by activity number including each activity's associated cost, percentage of Work accomplished, earned value- to date, previous payments, and amount earned for current update period.

(3) Schedule plots presenting time-scaled network diagram showing activities and their relationships with the controlling operations or critical path clearly highlighted.

(4) Cash flow report calculated by early start, late start, and indicating actual progress. Provide an exhibit depicting this information in graphic form.

(5) Planned versus actual resource (i.e., labor) histogram calculated by early start and late start.

C. Other Reports:

In addition to above reports, District may request, from month to month, any two of the following reports. Submit four (4) copies of all reports.

(1) Activities by early start.

(2) Activities by late start.

(3) Activities grouped by Subcontractors or selected trades.

(4) Activities with scheduled early start dates in a given time frame, such as fifteen (15) or thirty (30) day outlook.

D. Furnish District with report files on compact disks containing all schedule files for each report generated.

13.15 PROJECT STATUS REPORTING

A. In addition to submittal requirements for CPM scheduling identified in this Section, Contractor shall provide a monthly project status report (i.e., written narrative report) to be submitted in conjunction with each CPM Schedule as specified herein. Status reporting shall be in form specified below.

B. Contractor shall prepare monthly written narrative reports of status of Project for submission to District. Written status reports shall include:

(1) Status of major Project components (percent (%) complete, amount of time ahead or behind schedule) and an explanation of how Project will be brought back on schedule if delays have occurred.

(2) Progress made on critical activities indicated on CPM Schedule.

(3) Explanations for any lack of work on critical path activities planned to be performed during last month.

(4) Explanations for any schedule changes, including changes to logic or to activity durations.

(5) List of critical activities scheduled to be performed next month.

(6) Status of major material and equipment procurement.

(7) Any delays encountered during reporting period.

(8) Contractor shall provide printed report indicating actual versus planned resource loading for each trade and each activity. This report shall be provided on weekly and monthly basis.

(a) Actual resource shall be accumulated in field by Contractor, and shall be as noted on Contractor's daily reports. These reports will be basis for information provided in computer-generated monthly and weekly printed reports.

(b) Contractor shall explain all variances and mitigation measures.

(9) Contractor may include any other information pertinent to status of Project. Contractor shall include additional status information requested by District at no additional cost.

(10) Status reports, and the information contained therein, shall not be construed as claims, notice of claims, notice of delay, or requests for changes or compensation.

13.16 WEEKLY SCHEDULE REPORT

At the Weekly Progress Meeting, the Contractor shall provide and present a time-scaled three (3) week look-ahead schedule that is based and correlated by activity number to the current schedule (i.e., Initial, Original CPM, or Schedule Update).

13.17 DAILY CONSTRUCTION REPORTS

On a daily basis, Contractor shall submit a daily activity report to District for each workday, including weekends and holidays when worked. Contractor shall develop the daily construction reports on a computer-generated database capable of sorting daily Work, manpower, and man-hours by Contractor, Subcontractor, area, sub-area, and Change Order Work. Upon request of District, furnish computer disk of this data base. Obtain District's written approval of daily construction report data base format prior to implementation. Include in report:

A. Project name and Project number.

B. Contractor's name and address.

C. Weather, temperature, and any unusual site conditions.

D. Brief description and location of the day's scheduled activities and any special problems and accidents, including Work of Subcontractors. Descriptions shall be referenced to CPM scheduled activities.

E. Worker quantities for its own Work force and for Subcontractors of any tier.

F. Equipment, other than hand tools, utilized by Contractor and Subcontractors.

13.18 PERIODIC VERIFIED REPORTS

Contractor shall complete and verify construction reports on a form prescribed by the Division of the State Architect and file reports on the first day of February, May, August, and November during the preceding quarter year; at the completion of the Contract; at the completion of the Work; at the suspension of Work for a period of more than one (1) month; whenever the services of Contractor or any of Contractor's Subcontractors are terminated for any reason; and at any time a special verified report is required by the Division of the State Architect. Refer to section 4-336 and section 4-343 of Part 1, Title 24 of the California Code of Regulations.

PART 14 – PRODUCTS Not Used.

PART 15 - EXECUTION Not Used.

END OF DOCUMENT

DOCUMENT 01 33 00

SUBMITTALS

PART 16 - GENERAL

16.01 RELATED DOCUMENTS AND PROVISIONS:

All Contract Documents should be reviewed for applicable provisions related to the provisions in this document, including without limitation:

A. General Conditions, including, without limitation, Contractor's Submittals and Schedules, Drawings and Specifications;

B. Special Conditions.

16.02 SECTION INCLUDES:

A. Definitions:

(1) Shop Drawings and Product Data are as indicated in the General Conditions and include, but are not limited to, fabrication, erection, layout and setting drawings, formwork and falsework drawings, manufacturers' standard drawings, descriptive literature, catalogues, brochures, performance and test data, wiring and control diagrams. In addition, there are other drawings and descriptive data pertaining to materials, equipment, piping, duct and conduit systems, and methods of construction as may be required to show that the materials, equipment or systems and all positions conform to the requirement of the Contract Documents, including, without limitation, the Drawings.

(2) "Manufactured" applies to standard units usually mass-produced; "fabricated" means specifically assembled or made out of selected materials to meet design requirements. Shop Drawings shall establish the actual detail of manufactured or fabricated items, indicated proper relation to adjoining work and amplify design details of mechanical and electrical equipment in proper relation to physical spaces in the structure.

(3) Manufacturer's Instructions: Where any item of Work is required by the Contract Documents to be furnished, installed, or performed, at a minimum, in accordance with a specified product manufacturer's instructions, the Contractor shall procure and distribute copies of these to the District, the Architect, and all other concerned parties and shall furnish, install, or perform the work, at a minimum, in accordance with those instructions.

B. Samples, Shop Drawings, Product Data, and other items as specified, in accordance with the following requirements:

(1) Contractor shall submit all Shop Drawings, Product Data, and Samples to the District, the Architect, the Project Inspector, and the Construction Manager.

(2) Contractor shall comply with all time frames herein and in the General Conditions and, in any case, shall submit required information in sufficient time to permit proper consideration and action before ordering any materials or items represented by such Shop Drawings, Product Data, and/or Samples.

(3) Contractor shall allow sufficient time so that no delay occurs due to required lead time in ordering or delivery of any item to the Site. Contractor shall be responsible for any delay in progress of Work due to its failure to observe these requirements.

(4) Time for completion of Work shall not be extended on account of Contractor's failure to promptly submit Shop Drawings, Product Data, and/or Samples.

(5) Reference numbers on Shop Drawings shall have Architectural and/or Engineering Contract Drawings reference numbers for details, sections, and "cuts" shown on Shop Drawings. These reference numbers shall be in addition to any numbering system that Contractor chooses to use or has adopted as standard.

(6) When the magnitude or complexity of submittal material prevents a complete review within the stated time frame, Contractor shall make this submittal in increments to avoid extended delays.

(7) Contractor shall certify on submittals for review that submittals conform to Contract requirements. Also certify that Contractor-furnished equipment can be installed in allocated space. In event of any variance, Contractor shall specifically state in transmittal and on Shop Drawings, portions vary and require approval of a substitute. Submittals shall not be used as a means of requesting a substitution.

(8) Unless specified otherwise, sampling, preparation of samples, and tests shall be in accordance with the latest standard of the American Society for Testing and Materials.

(9) Upon demand by Architect or District, Contractor shall submit samples of materials and/or articles for tests or examinations and consideration before Contractor incorporates same in Work. Contractor shall be solely responsible for delays due to sample(s) not being submitted in time to allow for tests. Acceptance or rejection will be expressed in writing. Work shall be equal to approved samples in every respect. Samples that are of value after testing will remain the property of Contractor.

C. Submittal Schedule:

(1) Contractor shall prepare its proposed submittal schedule that is coordinated with the proposed construction schedule and submit both to the District within ten (10) days after the date of the Notice to Proceed. Contractor's proposed schedules shall become the Project Construction Schedule and the Project Submittal Schedule after each is approved by the District.

(2) Contractor is responsible for all lost time should the initial submittal be rejected, marked "revise and resubmit", etc.

(3) All Submittals shall be forwarded to the District by the date indicated on the approved Submittal Schedule, unless an earlier date is necessary to maintain the Construction Schedule, in which case those Submittals shall be forwarded to the District so as not to delay the Construction Schedule.

(4) Contractor may be assessed $100 a day for each day it is late in submitting a shop drawing or sample. No extensions of time will be granted to Trade Contractor or any Subcontractor because of its failure to have shop drawings and samples submitted in accordance with the Schedule.

16.03 SHOP DRAWINGS:

A. Contractor shall submit one reproducible transparency and six (6) opaque reproductions. The District will review and return the reproducible copy and one (1) opaque reproduction to Contractor.

B. Before commencing installation of any Work, the Contractor shall submit and receive approval of all drawings, descriptive data, and material list(s) as required to accomplish Work.

C. Review of Shop Drawings is regarded as a service to assist Contractor and in all cases original Contract Documents shall take precedence as outlined under General Conditions.

D. No claim for extra time or payment shall be based on work shown on Shop Drawings unless the claim is (1) noted on Contractor's transmittal letter accompanying Shop Drawings and (2) Contractor has complied with all applicable provisions of the General Conditions, including, without limitation, provisions regarding changes and payment, and all required written approvals.

E. District shall not review Shop Drawings for quantities of materials or number of items supplied.

F. District's and/or Architect’s review of Shop Drawing will be general. District and/or Architect review does not relieve Contractor of responsibility for dimensions, accuracy, proper fitting, construction of Work, furnishing of materials, or Work required by Contract Documents and not indicated on

Shop Drawings. The District's and/or Architect's review of Shop Drawings is not to be construed as approving departures from Contract Documents.

G. Review of Shop Drawings and Schedules does not relieve Contractor from responsibility for any aspect of those Drawings or Schedules that is a violation of local, County, State, or Federal laws, rules, ordinances, or rules and regulations of commissions, boards, or other authorities or utilities having jurisdiction.

H. Before submitting Shop Drawings for review, Contractor shall check Shop Drawings of its subcontractors for accuracy, and confirm that all Work contiguous with and having bearing on other work shown on Shop Drawings is accurately drawn and in conformance with Contract Documents.

I. Submitted drawings and details must bear stamp of approval of Contractor:

(1) Stamp and signature shall clearly certify that Contractor has checked Shop Drawings for compliance with Drawings.

(2) If Contractor submits a Shop Drawing without an executed stamp of approval, or whenever it is evident (despite stamp) that Drawings have not been checked, the District and/or Architect will not consider them and will return them to the Contractor for revision and resubmission. In that event, it will be deemed that Contractor has not complied with this provision and Contractor shall bear risk of all delays to same extent as if it had not submitted any Shop Drawings or details.

J. Submission of Shop Drawings (in either original submission or when resubmitted with correction) constitutes evidence that Contractor has checked all information thereon and that it accepts and is willing to perform Work as shown.

K. Contractor shall pay for cost of any changes in construction due to improper checking and coordination. Contractor shall be responsible for all additional costs, including coordination. Contractor shall be responsible for costs incurred by itself, the District, the Architect, the Project Inspector, the Construction Manager, any other Subcontractor or contractor, etc., due to improperly checked and/or coordination of submittals.

L. Shop Drawings must clearly delineate the following information:

(1) Project name and address.

(2) Specification number and description.

(3) Architect's name and project number.

(4) Shop Drawing title, number, date, and scale.

(5) Names of Contractor, Subcontractor(s) and fabricator.

(6) Working and erection dimensions.

(7) Arrangements and sectional views.

(8) Necessary details, including complete information for making connections with other Work.

(9) Kinds of materials and finishes.

(10) Descriptive names of materials and equipment, classified item numbers, and locations at which materials or equipment are to be installed in the Work. Contractor shall use same reference identification(s) as shown on Contract Drawings.

M. Contractor shall prepare composite drawings and installation layouts when required to solve tight field conditions.

(1) Shop Drawings shall consist of dimensioned plans and elevations and must give complete information, particularly as to size and location of sleeves, inserts, attachments, openings, conduits, ducts, boxes, structural interferences, etc.

(2) Contractor shall coordinate these composite Shop Drawings and installation layouts in the field between itself and its Subcontractor(s) for proper relationship to the Work, the work of other trades, and the field conditions. The Contractor shall check and approve all submittal(s) before submitting them for final review.

16.04 PRODUCT DATA OR NON REPRODUCIBLE SUBMITTALS:

A. Contractor shall submit manufacturer's printed literature in original form. Any fading type of reproduction will not be accepted. Contract must submit a minimum of six (6) each, to the District. District shall return one (1) to the Contractor, who shall reproduce whatever additional copies it requires for distribution.

B. Contractor shall submit six (6) copies of a complete list of all major items of mechanical, plumbing, and electrical equipment and materials in accordance with the approved Submittal Schedule, except as required earlier to comply with the approved Construction Schedule. Other items specified are to be submitted prior to commencing Work. Contractor shall submit items of like kind at one time in a neat and orderly manner. Partial lists will not be acceptable.

C. Submittals shall include manufacturer's specifications, physical dimensions, and ratings of all equipment. Contractor shall furnish performance curves for all pumps and fans. Where printed literature describes items in addition to that item being submitted, submitted item shall be clearly marked on sheet and superfluous information shall be crossed out. If highlighting is used, Contractor shall mark all copies.

D. Equipment submittals shall be complete and include space requirements, weight, electrical and mechanical requirements, performance data, and supplemental information that may be requested.

E. Imported Materials Certification must be submitted at least ten (10) days before material is delivered.

16.05 SAMPLES:

A. Contractor shall submit for approval Samples as required and within the time frame in the Contract Documents. Materials such as concrete, mortar, etc., which require on-site testing will be obtained from Project Site.

B. Contractor shall submit four (4) samples except where greater or lesser number is specifically required by Contract Documents including, without limitation, the Specifications.

(1) Samples must be of sufficient size and quality to clearly illustrate functional characteristics, with integrally related parts and attachment devices.

(2) Samples must show full range of texture, color, and pattern.

C. Contractor shall make all Submittals, unless it has authorized Subcontractor(s) to submit and Contractor has notified the District in writing to this effect.

D. Samples to be shipped prepaid or hand-delivered to the District.

E. Contractor shall mark samples to show name of Project, name of Contractor submitting, Contract number and segment of Work where representative Sample will be used, all applicable Specifications Sections and documents, Contract Drawing Number and detail, and ASTM or FS reference, if applicable.

F. Contractor shall not deliver any material to Site prior to receipt of District's and/or Architect’s completed written review and approval. Contractor shall furnish materials equal in every respect to approved Samples and execute Work in conformance therewith.

G. District's and/or Architect’s review, acceptance, and/or approval of Sample(s) will not preclude rejections of any material upon discovery of defects in same prior to final acceptance of completed Work.

H. After a material has been approved, no change in brand or make will be permitted.

I. Contractor shall prepare its Submittal Schedule and submit Samples of materials requiring laboratory tests to specified laboratory for testing not less than ninety (90) days before such materials are required to be used in Work.

J. Samples which are rejected must be resubmitted promptly after notification of rejection and be marked "Resubmitted Sample" in addition to other information required.

K. Field Samples and Mock-Ups are to be removed by Contractor at District’s direction:

(1) Size: As Specified.

(2) Furnish catalog numbers and similar data, as requested.

16.06 REVIEW AND RESUBMISSION REQUIREMENTS:

A. The District will arrange for review of Sample(s), Shop Drawing(s), Product Data, and other submittal(s) by appropriate reviewer and return to Contractor as provided below within twenty-one (21) days after receipt or within twenty-one (21) days after receipt of all related information necessary for such review, whichever is later.

B. One (1) copy of product or materials data will be returned to Contractor with the review status.

C. Samples to be incorporated into the Work will be returned to Contractor, together with a written notice designating the Sample with the appropriate review status and indicating errors discovered on review, if any. Other Samples will not be returned, but the same notice will be given with respect thereto, and that notice shall be considered a return of the Sample.

D. Contractor shall revise and resubmit any Sample(s), Shop Drawing(s), Product Data, and other submittal(s) as required by the reviewer. Such resubmittals will be reviewed and returned in the same manner as original Sample(s), Shop Drawing(s), Product Data, and other submittal(s), within fourteen (14) days after receipt thereof or within fourteen (14) days after receipt of all related information necessary for such review. Such resubmittal shall not delay the Work.

E. Contractor may proceed with any of the Work covered by Sample(s), Shop Drawing(s), Product Data, and other submittal(s) upon its return if designated as no exception taken, or revise as noted, provided the Contractor proceeds in accordance with the District and/or the Architect’s notes and comments.

F. Contractor shall not begin any of the work covered by a Sample(s), Shop Drawing(s), Product Data, and other submittal(s), designated as revise and resubmit or rejected, until a revision or correction thereof has been reviewed and returned to Contractor.

G. Sample(s), Shop Drawing(s), Product Data, and other submittal(s) designated as revise and resubmit or rejected and requiring resubmittal, shall be revised or corrected and resubmitted to the District no later than fourteen (14) days or a shorter period as required to comply with the approved Construction Schedule, after its return to Contractor.

H. Neither the review nor the lack of review of any Sample(s), Shop Drawing(s), Product Data, and other submittal(s) shall waive any of the requirements of the Contract Documents, or relieve Contractor of any obligation thereunder.

I. District's and/or Architect’s review of Shop Drawings does not relieve the Contractor of responsibility for any errors that may exist. Contractor is responsible for the dimensions and design of adequate connections and details and for satisfactory construction of all the Work.

PART 17 – PRODUCTS Not Used.

PART 18 - EXECUTION Not Used.

END OF DOCUMENT

DOCUMENT 01 35 13.23

SITE STANDARDS

PART 19 – GENERAL

19.01 RELATED DOCUMENTS AND PROVISIONS:

All Contract Documents should be reviewed for applicable provisions related to the provisions in this document, including without limitation:

A. General Conditions, including without limitation, Site Access, Conditions, and Regulations;

B. Special Conditions;

C. Drug-Free Workplace Certification;

D. Tobacco-Free Environment Certification;

E. Criminal Background Investigation/Fingerprinting Certification;

F. Temporary Facilities and Controls.

19.02 REQUIREMENTS OF THE DISTRICT:

A. Drug-Free Schools and Safety Requirements:

(1) All school sites and other District Facilities have been declared "Drug-Free Zones." No drugs, alcohol and/or smoking are allowed at any time in any buildings and/or grounds on District property. No students, staff, visitors, or contractors are to use drugs on these sites.

(2) Smoking and the use of tobacco products by all persons is prohibited on or in District property. District property includes school buildings, school grounds, school-owned vehicles and vehicles owned by others while on District property. Contractor shall post: "Non-Smoking Area" in a highly visible location in each work area, staging area, and parking area. Contractor may designate a smoking area outside of District property within the public right-of-way, provided that this area remains quiet and unobtrusive to adjacent neighbors. This smoking area is to be kept clean at all times.

(3) Contractor shall ensure that no alcohol, firearms, weapons, or controlled substances enter or are used at the Site. Contractor shall immediately remove from the Site and terminate the employment of any employee(s) found in violation of this provision.

B. Language: Profanity or other unacceptable and/or loud language will not be tolerated, "Cat calls" or other derogatory language toward students, staff, volunteers, parents or public will not be allowed.

C. Disturbing the Peace (Noise and Lighting):

(1) Contractor shall observe the noise ordinance of the Site at all times including, without limitation, all applicable local, city, and/or state laws, ordinances, and/or regulations regarding noise and allowable noise levels.

(2) The use of radios, etc., shall be controlled to keep all sound at a level that cannot be heard beyond the immediate area of use. District reserves the right to prohibit the use of radios at the Site, except for mobile phones or other handheld communication radios.

(3) If portable lights are used after dark, all light must be located so as not to direct light into neighboring property.

D. Traffic:

(1) Driving on the Premises shall be limited to periods when students and public are not present. If driving or deliveries must be made during the school hours, two (2) or more ground guides shall lead the vehicle across the area of travel. In no case shall driving take place across playgrounds or other pedestrian paths during recess, lunch, and/or class period changes. The speed limit on-the Premises shall be five (5) miles per hour (maximum) or less if conditions require.

(2) All paths of travel for deliveries, including without limitation, material, equipment, and supply deliveries, shall be reviewed and approved by District in advance. Any damage will be repaired to the pre-damaged condition by the Contractor.

(3) District shall designate a construction entry to the Site. If Contractor requests, District determines it is required, and to the extent possible, District shall designate a staging area so as not to interfere with the normal functioning of school facilities. Location of gates and fencing shall be approved in advance with District and at Contractor's expense.

(4) Parking areas shall be reviewed and approved by District in advance. No parking is to occur under the drip line of trees or in softscape areas that could otherwise be damaged.

E. All of the above shall be observed and complied with by the Contractor and all workers on the Site. Failure to follow these directives could result in individual(s) being suspended or removed from the work force at the discretion of the District. The same rules and regulations shall apply equally to delivery personnel, inspectors, consultants, and other visitors to the Site.

PART 20 - PRODUCTS Not Used.

PART 21 - EXECUTION Not Used.

END OF DOCUMENT

DOCUMENT 01 41 00

REGULATORY REQUIREMENTS

PART 22 - GENERAL

22.01 RELATED DOCUMENTS AND PROVISIONS:

All Contract Documents should be reviewed for applicable provisions related to the provisions in this document, including without limitation:

A. General Conditions, including, without limitation, Obtaining of Permits, Licenses and Registrations and Work to Comply with All Applicable Laws and Regulations;

B. Special Conditions; and

C. Quality Control.

22.02 DESCRIPTION:

This section covers the general requirements for regulatory requirements pertaining to the Work and is supplementary to all other regulatory requirements mentioned or referenced elsewhere in the Contract Documents.

22.03 REQUIREMENTS OF REGULATORY AGENCIES:

A. All statutes, ordinances, laws, rules, codes, regulations, standards, and the lawful orders of all public authorities having jurisdiction over the Work, are hereby incorporated into these Contract Documents as if repeated in full herein and are intended to be included in any reference to Code or Building Code, unless otherwise specified, including, without limitation, the references in the list below. Contractor shall make available at the Site copies of all the listed documents applicable to the Work as the District and/or Architect may request, including, without limitation, applicable portions of the California Code of Regulations ("CCR").

(1) California Building Standards Administrative Code, Part 1, Title 24, CCR.

(2) California Building Code (CBC), Part 2, Title 24, CCR; (International Building Code volumes 1-2 and California Amendments).

(3) California Electrical Code (CEC), Part 3, Title 24, CCR; (National Electrical Code and California Amendments).

(4) California Mechanical Code (CMC), Part 4, Title 24, CCR; (Uniform Mechanical Code and California Amendments).

(5) California Plumbing Code (CPC), Part 5, Title 24, CCR; (Uniform Plumbing Code and California Amendments).

(6) California Fire Code (CFC), Part 9, Title 24, CCR; (International Fire Code and California Amendments).

(7) California Referenced Standards Code, Part 12, Title 24, CCR.

(8) State Fire Marshal Regulations, Public Safety, Title 19, CCR.

(9) Partial List of Applicable National Fire Protection Association (NFPA) Standards:

(a) NFPA 13 - Automatic Sprinkler System.

(b) NFPA 14 - Standpipes Systems.

(c) NFPA 17A - Wet Chemical System

(d) NFPA 24 - Private Fire Mains.

(e) (California Amended) NFPA 72 - National Fire Alarm Codes.

(f) NFPA 253 - Critical Radiant Flux of Floor Covering System.

(g) NFPA 2001 - Clean Agent Fire Extinguishing Systems.

(10) California Division of the State Architect interpretation of Regulations ("DSA IR"), including, without limitation:

(a) DSA IR A-6 — Construction Change Document Submittal and Approval Processes.

(b) DSA IR A-7 — Project Inspector Certification and Approval.

(c) DSA IR A-8 — Project Inspector and Assistant Inspector Duties and Performance.

(d) DSA IR A-12 — Assistant Inspector Approval.

(11) DSA Procedures ("DSA PR")

(a) DSA PR 13-01 – Construction Oversight Process

(b) DSA PR 13-02 – Project Certification Process

B. This Project shall be governed by applicable regulations, including, without limitation, the State of California's Administrative Regulations for the Division of the State Architect-Structural Safety (DSA/SS), Chapter 4, Part 1, Title 24, CCR, and the most current version on the date the bids are opened and as it pertains to school construction including, without limitation:

(1) Test and testing laboratory per Section 4-335. District shall pay for the testing laboratory.

(2) Special inspections per Section 4-333(c).

(3) Deferred Approvals per section 4-317(g).

(4) Verified reports per Sections 4-336 & 4-343(c).

(5) Duties of the Architect & Engineers shall be per Sections 4-333(a) and 4-341.

(6) Duties of the Contractor shall be per Section 4-343.

(7) Duties of Project Inspector shall be per Section 4-334.

(8) Addenda and Construction Change Documents per Section 4-338.

Contractor shall keep and make available all applicable parts of the most current version of Title 24 referred to in the plans and specifications at the Site during construction.

C. Items of deferred approval shall be clearly marked on the first sheet of the Architect's and/or Engineer's approved Drawings. All items later submitted for approval shall be per Title 24 requirements to the DSA.

(1) Contractor shall submit the following to Architect for review and endorsement:

(a) Product information on proposed material/system supplier.

(b) Drawings, specifications, and calculations prepared, signed, and stamped by an architect or engineer licensed in the State of California for that portion of the Work.

(c) All other requirements as may be required by DSA.

(2) Cost of preparing and submitting documentation per DSA Deferred Approval requirements including required modifications to Drawings and Specifications, whether or not indicated in the Contract Documents, shall be borne by Contractor.

(3) Contractor shall not begin fabrication and installation of deferred approval items without first obtaining DSA approval of Drawings and Specifications.

(4) Schedule of Work Subject to DSA Deferred Approval: Window wall systems exceeding 10 feet in span.

PART 23 – PRODUCTS Not Used.

PART 24 – EXECUTION Not Used.

END OF DOCUMENT

DOCUMENT 01 42 13

ABBREVIATIONS AND ACRONYMS

PART 25 – GENERAL

25.01 RELATED DOCUMENTS AND PROVISIONS:

All Contract Documents should be reviewed for applicable provisions related to the provisions in this document, including without limitation:

A. General Conditions including without limitation, Definitions;

B. Special Conditions.

25.02 DOCUMENT INCLUDES:

A. Abbreviations used throughout the Contract Documents.

B. Reference to a technical society, organization, or body is by abbreviation, as follows:

1.	AA	The Aluminum Association
2.	AAMA	American Architectural Manufacturers Association
3.	AASHTO	American Association of State Highway and Transportation Officials
4.	ABPA	Acoustical and Board Products Association
5.	ACI	American Concrete Institute
6.	AGA	American Gas Association
7.	AGC	Associated General Contractors of America
8.	AHC	Architectural Hardware Consultant
9.	AI	Asphalt Institute
10.	AIA	American Institute of Architects
11.	AIEE	American Institute of Electrical Engineers
12.	AISC	American Institute of Steel Construction
13.	AISI	American Iron and Steel Institute
14.	AMCA	Air Moving and Conditioning Association
15.	ANSI	American National Standards Institute
16.	APA	American Plywood Association
17.	ARI	Air Conditioning and Refrigeration Institute
18.	ASHRAE	American Society of Heating, Refrigeration and Air Conditioning Engineers
19.	ASME	American Society of Mechanical Engineers
20.	ASSE	American Society of Structural Engineers
21.	ASTM	American Society of Testing and Materials
22.	AWPB	American Wood Preservers Bureau
23.	AWPI	American Wood preservers Institute
24.	AWS	American Welding Society
25.	AWSC	American Welding Society Code
26.	AWI	Architectural Woodwork Institute
27.	AWWA	American Water Works Association
28.	BIA	Brick Institute of America

29.	CCR	California Code of Regulations
30.	CLFMI	Chain Link Fence Manufacturers Institute
31.	CMG	California Masonry Guild
32.	CRA	California Redwood Association
33.	CRSI	Concrete Reinforcing Steel Institute
34.	CS	Commercial Standards
35.	CSI	Construction Specifications Institute
36.	CTI	Cooling Tower Institute
37.	FGMA	Flat Glass Manufacturer's Association
38.	FIA	Factory Insurance Association
39.	FM	Factory Mutual
40.	FS	Federal Specification
41.	FTI	Facing Title Institute
42.	GA	Gypsum Association
43.	ICC	International Code Council
44.	IEEE	Institute of Electrical and Electronic Engineers
45.	IES	Illumination Engineering Society
46.	LIA	Lead Industries Association
47.	MIA	Marble Institute of America
48.	MLMA	Metal Lath Manufacturers Association
49.	MS	Military Specifications
50.	NAAMM	National Association of Architectural Metal Manufacturers
51.	NBHA	National Builders Hardware Association
52.	NBFU	National Board of Fire Underwriters
53.	NBS	National Bureau of Standards
54.	NCMA	National Concrete Masonry Association
55.	NEC	National Electrical Code
56.	NEMA	National Electrical Manufacturers Association
57.	NFPA	National Fire Protection Association/National Forest Products Association
58.	NMWIA	National Mineral Wool Insulation Association
59.	NTMA	National Terrazzo and Mosaic Association
60.	NWMA	National Woodwork Manufacturer's Association
61.	ORS	Office of Regulatory Services (California)
62.	OSHA	Occupational Safety and Health Act
63.	PCI	Precast Concrete Institute
64.	PCA	Portland Cement Association
65.	PDCA	Painting and Decorating Contractors of America
66.	PDI	Plumbing Drainage Institute
67.	PEI	Porcelain Enamel Institute
68.	PG&E	Pacific Gas & Electric Company
69.	PS	Product Standards
70.	SDI	Steel Door Institute; Steel Deck Institute
71.	SJI	Steel Joist Institute
72.	SSPC	Steel Structures Painting Council
73.	TCA	Tile Council of America
74.	TPI	Truss Plate Institute
75.	UBC	Uniform Building Code
76.	UL	Underwriters Laboratories Code
77.	UMC	Uniform Mechanical Code
78.	USDA	United States Department of Agriculture
79.	VI	Vermiculite Institute

80.	WCLA	West Coast Lumberman's Association
81.	WCLB	West Coast Lumber Bureau
82.	WEUSER	Western Electric Utilities Service Engineering Requirements
83.	WIC	Woodwork Institute of California
84.	WPOA	Western Plumbing Officials Association

PART 26 - PRODUCTS Not Used.

PART 27 - EXECUTION Not Used.

END OF DOCUMENT

DOCUMENT 01 42 16

DEFINITIONS

PART 28 - GENERAL

28.01 RELATED DOCUMENTS AND PROVISIONS

All Contract Documents should be reviewed for applicable provisions related to the provisions in this document, including without limitation:

A. General Conditions including without limitation, Definitions;

B. Special Conditions.

28.02 QUALITY ASSURANCE

A. For products or workmanship specified by association, trade, or Federal Standards, Contractor shall comply with requirements of the standard, except when more rigid requirements are specified in the Contract Documents, or are required by applicable codes.

B. Contractor shall conform to current reference standard publication date in effect on the date of bid opening.

C. Contractor shall obtain copies of standards unless specifically required not to by the Contract Documents.

D. Contractor shall maintain a copy of all standards at jobsite during submittals, planning, and progress of the specific Work, until final completion, unless specifically required not to by the Contract Documents.

E. Should specified reference standards conflict with Contract Documents, Contractor shall request clarification from the District and/or the Architect before proceeding.

F. The contractual relationship of the parties to the Contract shall not be altered from the contractual relationship as indicated in the Contract Documents by mention or inference otherwise in any referenced document.

G. Governing Codes shall be as shown in the Contract Documents including, without limitation, the Specifications.

END OF DOCUMENT

DOCUMENT 01 42 19

REFERENCES

PART 29 - GENERAL

29.01 SCHEDULE OF REFERENCES:

The following information is intended only for the general assistance of the Contractor, and the District does not represent that all of the information is current. It is the Contractor's responsibility to verify the correct information for each of the entities listed.

AA	The Aluminum Association 1400 Crystal Drive, Suite 430 Arlington, VA 22202 www.aluminum.org	703/358-2960
AABC	Associated Air Balance Council 1518 K Street, NW, Suite 503 Washington, DC 20005 www.aabc.com	202/737-0202
AAMA	American Architectural Manufacturers Association 1827 Walden Office Sq., Suite 550 Schaumburg, IL 60173-4268 www.aamanet.org	847/303-5664
AASHTO	American Association of State Highway and Transportation Officials 444 N Capitol St. NW - Suite 249 Washington, DC 20001 www.transportation.org	202/624-5800
AATCC	American Association of Textile Chemists and Colorists P.O. Box 12215 One Davis Drive Research Triangle Park, NC 27709 2215 www.aatcc.org	919/549-8141
ACA	American Coatings Association 1500 Rhode Island Ave., NW Washington DC, 20005 www.paint.org	202/462-6272

ACI	American Concrete Institute 38800 Country Club Dr. Farmington Hills, MI 48331-3439 www.concrete.org	248/848-3700
ACPA	American Concrete Pipe Association 8445 Freeport Parkway, Suite 350 Irving, TX 75063-2595 www.concrete-pipe.org	972/506-7216
ADC	Air Duct Council 1901 N. Roselle Road, Suite 800 Schaumburg, Illinois 60195 www.flexibleduct.org	847/706-6750
AF&PA	American Forest and Paper Association 1101 K Street, NW, Suite 700 Washington, DC 20005 www.afandpa.org	202/463-2700
AGA	American Gas Association 400 North Capitol Street, NW Washington, DC 20001 www.aga.org	202/824-7000
AGC	Associate General Contractors of America 2300 Wilson Blvd., Suite 300 Arlington, VA 22201 www.agc.org	703/548-3118
AHA	American Hardboard Association 1210 West Northwest Highway Palatine, IL 60067 domensino.com/AHA/default.htm	847/934-8800
AI	Asphalt Institute 2696 Research Park Drive Lexington, KY 40511-8480 www.asphaltinstitute.org	859/288-4960
AIA	The American Institute of Architects 1735 New York Ave., NW Washington, DC 20006-5292 www.aia.org	202/626-7300
AISC	American Institute of Steel Construction 130 East Randolph Street Suite 2000 Chicago, IL 60601 www.aisc.org	312.670.2400

AIA	American Insurance Association (formerly the National Board of Fire Underwriters) 555 12th St, NW, Suite 550 Washington DC 20004 www.aiadc.org	202/828-7100
AISI	American Iron and Steel Institute 25 Massachusetts Ave., NW, Suite 800 Washington, DC 20001 www.steel.org	202/452.7100
AITC	American Institute of Timber Construction 7012 S. Revere Parkway Suite 140 Centennial, CO 80112 www.aitc-glulam.org	503/639.0651
ALI	Associated Laboratories, Inc. P.O. Box 152837 Dallas, TX 75315 www.assoc-labs.com	214/565-0593
ALSC	American Lumber Standards Committee, Inc. 7470 New Technology Way, Suite F Frederick, MD 21703 www.alsc.org	301/972-1700
AMCA	Air Movement and Control Association International, Inc. 30 W. University Drive Arlington Heights, IL 60004 www.amca.org	847/394-0150
ANLA	American Nursery & Landscape Association (now AmericanHort) 525 9th St NW, Suite 80 Washington, DC 20004 www.americanhort.org	202/789-2900
ANSI	American National Standards Institute 1899 L Street, NW, 11th Floor Washington, DC, 20036 www.ansi.org	202/293.8020
APA	APA-The Engineered Wood Association 7011 S. 19th Street Tacoma, WA 98466-5333 www.apawood.org	253/565-6600

APA	Architectural Precast Association 325 John Know Rd, Ste L103 Tallahassee, FL 32303 www.archprecast.org	850/205.5637
ARI	Air Conditioning and Refrigeration Institute (now Air-Conditioning, Heating, & Refrigeration Institute) 2111 Wilson Blvd, Suite 500 Arlington, VA 22201 www.ahrinet.org	703/524-8800
ARMA	Asphalt Roofing Manufacturers Association Public Information Department 750 National Press Building 529 14th Street, NW Washington, DC 20045 www.asphaltroofing.org	202/591-2450
ASA	The Acoustical Society of America ASA Office Manager Suite 1NO1 2 Huntington Quadrangle Melville, NY 11747-4502 http://asa.aip.org	516/576-2360
ASCE	American Society of Civil Engineers 1801 Alexander Bell Drive Reston, VA 20191 www.asce.org	800/548-2723 703/295-6300
ASHRAE	American Society of Heating, Refrigerating and Air Conditioning Engineers 1791 Tullie Circle, NE Atlanta, GA 30329-2305 www.ashrae.org	800/527-4723 404/636-8400
ASLA	American Society of Landscape Architects 636 Eye Street, NW Washington, DC 20001-3736 www.asla.org	202/898-2444
ASME	American Society of Mechanical Engineers Three Park Avenue New York, NY 10016-5990 www.asme.org	800/434-2763
ASPE	American Society of Plumbing Engineers 2980 S River Rd. Des Plaines, IL 60018 http://aspe.org	847/296-0002

ASQ	American Society for Quality P.O. Box 3005 Milwaukee, WI 53201-3005 or 600 North Plankinton Avenue Milwaukee, WI 53203 http://asq.org	800/248-1946 414/272-8575
ASSE	American Society of Sanitary Engineering 901 Canterbury, Suite A Westlake, Ohio 44145 www.asse-plumbing.org	440/835-3040
ASTM	ASTM International 100 Barr Harbor Drive PO Box C700 West Conshohocken, PA, 19428-2959 www.astm.org	610/832-9500
AWCI	Association of the Wall and Ceiling Industry 513 West Broad Street, Suite 210 Falls Church, VA 22046 www.awci.org	703/538-1600
AWPA	American Wood Protection Association P.O. Box 361784 Birmingham, AL 35236-1784 www.awpa.com	205/733-4077
AWPI	American Wood Preservers Institute 2750 Prosperity Ave. Suite 550 Fairfax, VA 22031-4312 www.arcat.com	800/356-AWPI 703/204-0500
AWS	American Welding Society 8669 Doral Boulevard, Suite 130 Doral, Florida 33166 www.aws.org	800/443-9353 305/443-9353
AWI	Architectural Woodwork Institute 46179 Westlake Drive, Suite 120 Potomac Falls, VA 20165-5874 www.awinet.org	571/323-3636
AWWA	American Water Works Association 6666 West Quincy Avenue Denver, CO 80235 www.awwa.org	800/926-7337 303/794 7711

BHMA	Builders Hardware Manufacturers Association 355 Lexington Avenue, 15th floor New York, NY 10017 www.buildershardware.com	212/297-2122
BIA	The Brick Industry Association 1850 Centennial Park Drive, Suite 301 Reston, VA 20191 www.gobrick.com	703/620-0010
CGA	Compressed Gas Association 14501 George Carter Way, Suite 103 Chantilly VA 20151-2923 www.cganet.com	703/788-2700
CISCA	Ceilings & Interior Systems Construction Association 1010 Jorie Blvd, Suite 30 Oak Brook, IL 60523 www.cisca.org	630/584-1919
CISPI	Cast Iron Soil Pipe Institute 1064 Delaware Avenue SE Atlanta, GA 30316 www.cispi.org	404/622-0073
CLFMI	Chain Link Fence Manufacturers Institute 10015 Old Columbia Road, Suite B-215 Columbia, MD 21046 www.associationsites.com/main-pub.cfm?usr=clfma	410/290-6267
CPA	Composite Panel Association 19465 Deerfield Avenue, Suite 306 Leesburg, VA 20176 www.compositepanel.org	703/724-1128
CPSC	Consumer Product Safety Commission 4330 East West Highway Bethesda, MD 20814 www.cpsc.gov	301/504-7923 800/638-2772
CRA	California Redwood Association 405 Enfrente Drive, Suite 200 Novato, CA 94949 www.calredwood.org	415/382-0662

CRI	Carpet and Rug Institute P.O. Box 2048 Dalton, Georgia 30722-2048 www.carpet-rug.org	706/278-3176
CRSI	Concrete Reinforcing Steel Institute 933 N. Plum Grove Road Schaumburg, IL 60173 4758 www.crsi.org	847/517-1200
CSI	The Construction Specifications Institute 110 South Union Street, Suite 100 Alexandria VA 22314 www.csinet.org	800/689-2900
CTIOA	Ceramic Tile Institute of America 12061 Jefferson Blvd. Culver City, CA 90230-6219 www.ctioa.org	310/574-7800
DHI	Door and Hardware Institute (formerly National Builders Hardware Association) 14150 Newbrook Dr. Chantilly, VA 20151 www.dhi.org	703/222-2010
DIPRA	Ductile Iron Pipe Research Association 2000 2nd Avenue, South Suite 429 Birmingham, AL 35233 www.dipra.org	205/402-8700
DOC	U.S. Department of Commerce 1401 Constitution Ave., NW Washington, D.C. 20230 www.commerce.gov	202/482-2000
DOT	U.S. Department of Transportation 1200 New Jersey Avenue, SE Washington, DC 20590 www.dot.gov	855/368-4200
EJMA	Expansion Joint Manufacturers Association, Inc. 25 North Broadway Tarrytown, NY 10591 www.ejma.org	914/332-0040

EPA	Environmental Protection Agency Ariel Rios Building 1200 Pennsylvania Avenue, N.W. Washington, DC 20460 www.epa.gov	202/272-0167
FCICA	Floor Covering Installation Contractors Association 7439 Millwood Drive West Bloomfield, MI 48322 www.fcica.com	248/661-5015 877/TO-FCICA
FM Global	Factory Mutual Insurance Company Amy Daley Global Practice Leader – Education, Public Entities, Health Care FM Global 270 Central Avenue Johnston, RI 02919-4949 www.fmglobal.com	401/275-3000 401/275-3029
FS	General Services Administration (GSA) Index of Federal Specifications, Standards and Commercial Item Descriptions 470 East L'Enfant Plaza, SW, Suite 8100 Washington, DC 20407 www.gsa.gov	202/619-8925
GA	The Gypsum Association 6525 Belcrest Road, Suite 480 Hyattsville, MD 20782 www.gypsum.org	301/277-8686
GANA	Glass Association of North America 800 SW Jackson St., Suite 1500 Topeka, KS 66612-1200 www.glasswebsite.com	785/271-0208
HMA	Hardwood Manufacturers Association 665 Rodi Road, Suite 305 Pittsburgh, PA 15235 http://hmamembers.org	412/244-0440
HPVA	Hardwood Plywood & Veneer Association 1825 Michael Faraday Drive Reston, Virginia 20190 www.hpva.org	703/435-2900

IAPMO	International Association of Plumbing and Mechanical Officials (formerly the Western Plumbing Officials Association) 4755 E. Philadelphia St. Ontario, CA 91761 www.iapmo.org	909/472-4100
ICC	International Code Council 500 New Jersey Avenue, NW, 6th Floor Washington, DC 20001 www.iccsafe.org	888/422-7233
IEEE	Institute of Electrical and Electronics Engineers 3 Park Avenue, 17th Floor New York, NY 10016-5997 www.ieee.org	212/419-7900
IES	Illuminating Engineering Society 120 Wall Street, Floor 17 New York, NY 10005-4001 www.ies.org	212/248-5000
ITRK	Intertek Testing Services 3933 US Route 11 Cortland, NY 13045 www.intertek.com	607/753-6711
MCAA	Mechanical Contractors Association of America 1385 Piccard Drive Rockville, MD 20850 www.mcaa.org	301/869-5800
MIA	Marble Institute of America 28901 Clemens Rd, Ste 100 Cleveland, OH 44145 www.marble-institute.com	440/250-9222
MMPA (formerly WMMPA)	Moulding & Millwork Producers Association (formerly Wood Moulding & Millwork Producers Association) 507 First Street Woodland, CA 95695 www.wmmpa.com	530/661-9591 800/550-7889

MSS	Manufacturers Standardization Society (MSS) of the Valve and Fittings Industry 127 Park Street, NE Vienna, VA 22180-4602 http://mss-hq.org	703/281-6613
NAAMM	National Association of Architectural Metal Manufacturers 800 Roosevelt Rd. Bldg. C, Suite 312 Glen Ellyn, IL 60137 www.naamm.org	630/942-6591
NAIMA	North American Insulation Manufacturers Association 44 Canal Center Plaza, Suite 310 Alexandria, VA 22314 www.naima.org	703/684-0084
NAPA	National Asphalt Pavement Association 5100 Forbes Blvd. Lanham, MD USA 20706-4407 www.asphaltpavement.org	888/468-6499 301/731-4748
NCSPA	National Corrugated Steel Pipe Association 14070 Proton Road, Suite 100 LB9 Dallas, TX 75244 www.ncspa.org	972/850-1907
NCMA	National Concrete Masonry Association 13750 Sunrise Valley Drive Herndon, VA 20171-4662 www.ncma.org	703/713-1900
NEBB	National Environmental Balancing Bureau 8575 Grovemont Circle Gaithersburg, MD 20877 www.nebb.org	301/977-3698
NECA	National Electrical Contractors Association 3 Bethesda Metro Center, Suite 1100 Bethesda, MD 20814 www.necanet.org	301/657-3110
NEMA	National Electrical Manufacturers Association 1300 North 17th Street, Suite 1752 Rosslyn, Virginia 22209 www.nema.org	703/841-3200

NEII	National Elevator Industry, Inc. 1677 County Route 64 P.O. Box 838 Salem, New York 12865-0838 www.neii.org	518/854-3100
NFPA	National Fire Protection Association 1 Batterymarch Park Quincy, Massachusetts USA 02169-7471 www.nfpa.org	617/770-3000
NHLA	National Hardwood Lumber Association PO Box 34518 Memphis, TN 38184 www.nhla.com	901/377-1818
NIA	National Insulation Association 12100 Sunset Hills Road, Suite 330 Reston, VA 20190 www.insulation.org	703/464-6422
NRCA	National Roofing Contractors Association 10255 W. Higgins Road, Suite 600 Rosemont, IL 60018-5607 www.nrca.net	847/299-9070
NSF	NSF International P.O. Box 130140 789 N. Dixboro Road Ann Arbor, MI 48113-0140, USA www.nsf.org	800/673-6275 734/769-8010
NTMA	National Terrazzo and Mosaic Association PO Box 2605 Fredericksburg, TX 78624 www.ntma.com	800/323-9736
OSHA	Occupational Safety and Health Act U.S. Department of Labor Occupational Safety & Health Administration 200 Constitution Ave., NW Washington, D.C. 20210 www.osha.gov	800/321-OSHA (6742)

PCA	Portland Cement Association 5420 Old Orchard Road Skokie, IL 60077 or 500 New Jersey Ave., N.W. 7th Floor Washington, D.C. 20001 www.cement.org	847/966-6200 202/408-9494
PCI	Precast/Prestressed Concrete Institute 200 W. Adams St. #2100 Chicago, IL 60606 www.pci.org	312/786-0300
PDCA	Painting and Decorating Contractors of America 2316 Millpark Drive, Ste 220 Maryland Heights, MO 63043 www.pdca.com	800/332-PDCA (7322) 314/514-7322
PDI	Plumbing & Drainage Institute 800 Turnpike Street, Suite 300 North Andover, MA 01845 http://pdionline.org	978/557-0720 800/589-8956
PEI	Porcelain Enamel Institute, Inc. P.O. Box 920220 Norcross, GA 30010 www.porcelainenamel.com	770/676-9366
PG&E	Pacific Gas & Electric Company www.pge.com	800/743-5000
PLANET	Professional Landcare Network 950 Herndon Parkway, Suite 450 Herndon, Virginia 20170 www.landcarenetwork.org	703/736-9666 800/395-2522 703/736-9668
RFCI	Resilient Floor Covering Institute 115 Broad Street, Suite 201 La Grange GA 30240 www.rfci.com	706/882-3833
RIS	Redwood Inspection Service 818 Grayson Road, Suite 201 Pleasant Hill, CA 94523 www.redwoodinspection.com	925/935-1499
SDI	Steel Deck Institute P.O. Box 25 Fox River Grove, IL 60021 www.sdi.org	847/458-4647

SDI	Steel Door Institute 30200 Detroit Road Westlake, Ohio 44145 www.steeldoor.org	440/899-0010
SJI	Steel Joist Institute 234 W. Cheves Street Florence, SC 29501 http://steeljoist.org	843/407-4091
SMA	Stucco Manufacturers Association 500 East Yale Loop Irvine, CA 92614 www.stuccomfgassoc.com	949/387.7611
SMACNA	Sheet Metal and Air Conditioning Contractors' National Association 4201 Lafayette Center Drive Chantilly, Virginia 20151-1219 www.smacna.org	703/803-2980
SPI	SPI: The Plastics Industry Trade Association, Inc. 1667 K St., NW, Suite 1000 Washington, DC 20006 www.plasticsindustry.org	202/974-5200
SSPC	Society for Protective Coatings (formerly the Steel Structures Painting Council) 40 24th St 6th Fl Pittsburgh, PA 15222 www.sspc.org	412/281-2331 877/281-7772
TCA	The Tile Council of North America 100 Clemson Research Blvd. Anderson, SC 29625 www.tcnatile.com	864/646-8453
TPI	Truss Plate Institute 218 North Lee Street, Suite 312 Alexandria, VA 22314 www.tpinst.org	703/683-1010
TPI	Turfgrass Producers International 2 East Main Street East Dundee, IL 60118 www.turfgrasssod.org	800/405-8873 847/649-5555

TCIA	Tree Care Industry Association (formerly the National Arborist Association) 136 Harvey Road, Suite 101 Londonderry, NH 03053 www.tcia.org	800/733-2622
TVI	The Vermiculite Institute c/o The Schundler Company 150 Whitman Avenue Edison, NJ. 08817 www.vermiculiteinstitute.org	732/287-2244
UL	Underwriters Laboratories Inc. 333 Pfingsten Road Northbrook, IL 60062-2096 www.ul.com	847/272-8800 877/854-3577
UNI	Uni-Bell PVC Pipe Association 2711 LBJ Freeway, Suite 1000 Dallas, TX 75234 www.uni-bell.org	972/243-3902
USDA	U.S. Department of Agriculture 1400 Independence Ave., S.W. Washington, DC 20250 www.usda.gov	202/720-2791
WA	Wallcoverings Association 401 North Michigan Avenue Suite 2200 Chicago, IL 60611 www.wallcoverings.org	312/321-5166

WCLIB	West Coast Lumber Inspection Bureau P.O. Box 23145 Portland, OR 97281 or 6980 S.W. Varns Tigard, OR 97223 www.wclib.org	503/639-0651
WCMA	Window Covering Manufacturers Association 355 Lexington Avenue 15th Floor New York, New York 10017 www.wcmanet.org	212/297-2122
WDMA	Window & Door Manufacturers Association 401 N. Michigan Avenue, Suite 2200 Chicago, IL 60611 or 2025 M Street, NW, Ste. 800 Washington, D.C. 20036-3309 www.wdma.com	312/321-6802 202/367-1157
WI	Woodwork Institute P.O. Box 980247 West Sacramento, CA 95798 www.wicnet.org	916/372-9943
WRI	Wire Reinforcement Institute 942 Main Street Hartford, CT 06103 www.wirereinforcementinstitute.org	860/240-9545
WWCA	Western Wall & Ceiling Contractors Association 1910 N. Lime St. Orange, California 92865 www.wwcca.org	714/221-5520
WWPA	Western Wood Products Association 522 SW Fifth Ave., Suite 500 Portland, OR 97204-2122 www2.wwpa.org	503/224-3930

PART 30 - PRODUCTS Not Used.

PART 31 - EXECUTION Not Used.

END OF DOCUMENT

DOCUMENT 01 43 00

MATERIALS AND EQUIPMENT

PART 32 - GENERAL

32.01 RELATED DOCUMENTS AND PROVISIONS

All Contract Documents should be reviewed for applicable provisions related to the provisions in this document, including without limitation:

A. General Conditions, including, without limitation, Purchase of Materials and Equipment;

B. Special Conditions;

C. Imported Materials Certification.

32.02 MATERIAL AND EQUIPMENT

A. Only items approved by the District and/or Design Professional shall be used.

B. Contractor shall submit lists of products and other product information in accordance with the Contract Documents, including, without limitation, the provisions regarding the submittals.

32.03 MATERIAL AND EQUIPMENT COLORS

A. The District and/or Architect will provide a schedule of colors.

B. No individual color selections will be made until after approval of all pertinent materials and equipment and after receipt of appropriate samples in accordance with the Contract Documents, including, without limitation, the provisions regarding the submittals.

C. Contractor shall request priority in writing for any item requiring advance ordering to maintain the approved Construction Schedule.

32.04 DELIVERY, STORAGE, AND HANDLING

A. Contractor shall deliver manufactured materials in original packages, containers, or bundles (with seals unbroken), bearing name or identification mark of manufacturer.

B. Contractor shall deliver fabrications in as large assemblies as practicable; where specified as shop-primed or shop-finished, package or crate as required to preserve such priming or finish intact and free from abrasion.

C. Contractor shall store materials in such a manner as necessary to properly protect them from damage. Materials or equipment damaged by handling, weather, dirt, or from any other cause will not be accepted.

D. Materials are not acceptable that have been warehoused for long periods of time, stored or transported in improper environment, improperly packaged, inadequately labeled, poorly protected, excessively shipped, deviated from normal distribution pattern, or reassembled.

E. Contractor shall store material so as to cause no obstructions of sidewalks, roadways, access to the Site or buildings, and underground services. Contractor shall protect material and equipment furnished under Contract.

F. Contractor may store materials on Site with prior written approval by the District, all material shall remain under Contractor's control and Contractor shall remain liable for any damage to the materials. Should the Project Site not have storage area available, the Contractor shall provide for off-site storage at a bonded warehouse and with appropriate insurance coverage at no cost to District.

G. When any room in Project is used as a shop or storeroom, the Contractor shall be responsible for any repairs, patching, or cleaning necessary due to that use. Location of storage space shall be subject to prior written approval by District.

PART 33 - PRODUCTS

33.01 MANUFACTURERS

A. Manufacturers listed in various sections of Contract Documents are names of those manufacturers that are believed to be capable of supplying one or more of items specified therein.

B. The listing of a manufacturer does not imply that every product of that manufacturer is acceptable as meeting the requirements of the Contract Documents.

33.02 FACILITIES AND EQUIPMENT

Contractor shall provide, install, maintain, and operate a complete and adequate facility for handling, the execution, disposal, and distribution of material and equipment as required for proper and timely performance of Work connected with Contract.

33.03 MATERIAL REFERENCE STANDARDS

Where material is specified solely by reference to "standard specifications" and if requested by District, Contractor shall submit for review data on actual material proposed to be incorporated into Work of Contract listing name and address of vendor, manufacturer, or producer, and trade or brand names of those materials, and data substantiating compliance with standard specifications.

PART 34 - EXECUTION

34.01 WORKMANSHIP

A. Where not more specifically described in any other Contract Documents, workmanship shall conform to methods and operations of best standards and accepted practices of trade or trades involved and shall include items of fabrication, construction, or installation regularly furnished or required for completion (including finish and for successful operation, as intended).

B. Work shall be executed by tradespersons skilled in their respective lines of Work. When completed, parts shall have been durably and substantially built and present a neat appearance.

34.02 COORDINATION

A. Contractor shall coordinate installation of Work so as to not interfere with installation of others. Adjustment or rework because of Contractor's failure to coordinate will be at no additional cost to District.

B. Contractor shall examine in-place work for readiness, completeness, fitness to be concealed or to receive other work, and in compliance with Contract Documents. Concealing or covering Work constitutes acceptance of additional cost which will result should in-place Work be found unsuitable for receiving other Work or otherwise deviating from the requirements of the Contract Documents.

34.03 COMPLETENESS

Contractor shall provide all portions of the Work, unless clearly stated otherwise, installed complete and operational with all elements, accessories, anchorages, utility connections, etc., in manner to assure well-balanced performance, in accordance with manufacturer's recommendations and by Contract Documents. For example, electric water coolers require water, electricity, and drain services; roof drains require drain system; sinks fit within countertop, etc. Terms such as "installed complete," "operable condition," "for use intended," "connected to all utilities," "terminate with proper cap," "adequately anchored," "patch and refinish," "to match similar," should be assumed to apply in all cases, except where completeness of functional or operable condition is specifically stated as not required.

34.04 APPROVED INSTALLER OR APPLICATOR

Installation by a manufacturer's approved installer or applicator is an understood part of Specifications and only approved installer or applicator is to provide on-site Work where specified manufacturer has on-going program of approving (i.e. certifying, bonding, re-warranting) installers or applicators. Newly established relationships between a manufacturer and an installer or applicator who does not have other approved applicator work in progress or completed is not approved for this Project.

34.05 MANUFACTURER'S RECOMMENDATIONS

All installations shall be in accordance with manufacturer's published recommendations and specific written directions of manufacturer's representative. Should Contract Documents differ from recommendations of manufacturer or directions of his representative, Contractor shall analyze differences, make recommendations to the District and the Architect in writing, and shall not proceed until interpretation or clarification has been issued by the District and/or the Architect.

END OF DOCUMENT

DOCUMENT 01 45 00

QUALITY CONTROL

PART 35 - GENERAL

35.01 RELATED DOCUMENTS AND PROVISIONS:

All Contract Documents should be reviewed for applicable provisions related to the provisions in this document, including without limitation:

A. General Conditions, including, without limitation, Inspector, Inspections and Tests, Uncovering of Work and Non-conforming of Work and Correction of Work;

B. Special Conditions.

35.02 RELATED CODES:

A. The Work is governed by requirements of Title 24, California Code of Regulations ("CCR"), and the Contractor shall keep a copy of these available at the job Site for ready reference during construction.

B. The Division of the State Architect ("DSA") shall be notified at or before the start of construction.

35.03 OBSERVATION AND SUPERVISION:

A. The District and Architect or their appointed representatives will review the Work and the Contractor shall provide facilities and access to the Work at all times as required to facilitate this review. Administration by the Architect and any consulting Structural Engineer will be in accordance with applicable regulations, including, without limitation, CCR, Part 1, Title 24, Section 4-341.

B. One or more Project Inspector(s) approved by DSA and employed by or in contract with the District, referred to hereinafter as the "Project Inspector", will observe the work in accordance with CCR, Part 1, Title 24, Sections 4-333(b) and 4-342:

(1) The Project Inspector and Special Inspector(s) shall have access to the Work wherever it is in preparation or progress for ascertaining that the Work is in accordance with the Contract Documents and all applicable code sections. The Contractor shall provide facilities and operation of equipment as needed, and access as required and shall provide assistance for sampling or measuring materials.

(2) The Project Inspector will notify the District and Architect and call the attention of the Contractor to any observed failure of Work or material to conform to Contract Documents.

(3) The Project Inspector shall observe and monitor all testing and inspection activities required.

The Contractor shall conform with all applicable laws as indicated in the Contract Documents, including, without limitation, to CCR, Part 1, Title 24, Section 4-343. The Contractor shall supervise and direct the Work and maintain a competent superintendent on the job who is authorized to act in all matters pertaining to the Work. The Contractor's superintendent shall also inspect all materials, as they arrive, for compliance with the Contract Documents. Contractor shall reject defective Work or materials immediately upon delivery or failure of the Work or material to comply with the Contract Documents. The Contractor shall submit verified reports as indicated in the Contract Documents, including, without limitation, the Specifications and as required by Part 1, Title 24, Section 4-336.

35.04 TESTING AGENCIES:

A. Testing agencies and tests shall be in conformance with the General Documents and the requirements of Part 1, Title 24, Section 4- 335.

B. Testing and inspection in connection with earthwork shall be under the direction of the District's consulting soils engineer, if any, referred to hereinafter as the "Soils Engineer."

C. Testing and inspection of construction materials and workmanship shall be performed by a qualified laboratory, referred to hereinafter as the "Testing Laboratory." The Testing Laboratory shall be under direction of an engineer registered in the State of California, shall conform to requirements of ASTM E329, and shall be employed by or in contract with the District.

35.05 TESTS AND INSPECTIONS:

A. The Contractor shall be responsible for notifying the District and Project Inspector of all required tests and inspections. Contractor shall notify the District and Project Inspector at least seventy-two hours (72) hours in advance of performing any Work requiring testing or inspection.

B. The Contractor shall provide access to Work to be tested and furnish incidental labor, equipment, and facilities to facilitate all inspections and tests.

C. The District will pay for first inspections and tests required by the "CCR", and other inspections or tests that the District and/or the Architect may direct to have made, including the following principal items:

(1) Tests and observations for earthwork and paving.

(2) Tests for concrete mix designs, including tests of trial batches.

(3) Tests and inspections for structural steel work.

(4) Field tests for framing lumber moisture content.

(5) Additional tests directed by the District that establish that materials and installation comply with the Contract Documents.

(6) Tests and observations of welding and expansion anchors.

D. The District may at its discretion, pay and then back charge the Contractor for:

(1) Retests or reinspections, if required, and tests or inspections required due to Contractor error or lack of required identifications of material.

(2) Uncovering of work in accordance with Contract Documents.

(3) Testing done on weekends, holidays, and overtime will be chargeable to the Contractor for the overtime portion.

(4) Testing done off Site.

E. Testing and inspection reports and certifications:

(1) If initially received by Contractor, Contractor shall provide to each of the following a copy of the agency or laboratory report of each test or inspection or certification.

(a) The District;

(b) The Construction Manager, if any;

(c) The Architect;

(d) The Consulting Engineer, if any;

(e) Other engineers on the Project, as appropriate;

(f) The Project Inspector; and

(g) The Contractor.

(2) When the test or inspection is one required by the CCR, a copy of the report shall also be provided to the DSA.

PART 36 - PRODUCTS

36.01 TYPE OF TESTS AND INSPECTIONS

A. Testing and inspection shall be in accordance with DSA Form 103 (or current version)

B. Slump Test
ASTM C 143

C. Concrete Tests

Testing agency shall test concrete used in the work per the following paragraphs:

(1) Compressive Strength:

(a) Minimum number of tests required: One (1) set of three (3) cylinders for each 100 cubic yards (Sec. 2604(h) 01) of concrete or major fraction thereof, placed in one (1) day. See Title 24, Section 2605(g).

(b) Two cylinders of each set shall be tested at twenty-eight (28) days. One (1) cylinder shall be held in reserve and tested only when directed by the Architect or District.

(c) Concrete shall test the minimum ultimate compressive strength in twenty-eight 28 days, as specified on the structural drawings.

(d) In the event that the twenty-eight (28) day test falls below the minimum specified strength, the effective concrete in place shall be tested by taking cores in accordance with UBC Standard No. 26-13 and tested as required for cylinders.

(e) In the event that the test on core specimens falls below the minimum specified strength, the concrete will be deemed defective and shall be removed and replaced upon such direction of the Architect, and in a manner acceptable to the Division of the State Architect.

D. Reinforcing, Steel

E. Structural Steel Per Title 24 and as noted:

(1) Material: Steel per Table in Title 24, Section 2712.

(2) Qualification of Welders (UBC Std. 27-6).

(3) Shop fabrication (Section 2712(d). Structural steel only).

(4) Shop and field welding (Section 2712(e)).

PART 37 - EXECUTION Not Used.

END OF DOCUMENT

DOCUMENT 01 64 00

OWNER-FURNISHED PRODUCTS

PART 47 – GENERAL

47.01 RELATED DOCUMENTS AND PROVISIONS

All Contract Documents should be reviewed for applicable provisions related to the provisions in this document, including without limitation:

A. General Conditions;

B. Special Conditions; and

C. Materials and Equipment.

47.02 SECTION INCLUDES

A. Requirements for the following:

(1) Installing Owner-furnished materials and equipment.

(2) Providing necessary utilities, connections and rough-ins.

47.03 DEFINITIONS

A. Owner: District, who is providing/furnishing materials and equipment.

B. Installing Contactor: Contractor, who is installing the materials and equipment furnished by the Owner.

47.04 PRODUCT DELIVERY, STORAGE, AND HANDLING

A. Receive, store and handle products in accordance with the manufacturer's instructions.

B. Protect equipment items as required to prevent damage during storage and construction.

PART 48 – PRODUCTS

48.01 GENERAL PRODUCT REQUIREMENTS

A. Installing Contractor's Responsibilities:

(1) Verify mounting and utility requirements for Owner-furnished materials and equipment items.

(2) Provide mounting and utility rough in for all items where required.

DOCUMENT 01 50 00

TEMPORARY FACILITIES AND CONTROLS

PART 38 – GENERAL

38.01 RELATED DOCUMENTS AND PROVISIONS:

All Contract Documents should be reviewed for applicable provisions related to the provisions in this document, including without limitation:

A. General Conditions;

B. Special Conditions;

C. Site Standards; and

D. Construction Waste Management and Disposal.

38.02 TEMPORARY UTILITIES:

A. Electric Power and Lighting:

(1) Contractor will pay for power during the course of the Work. To the extent power is available in the building(s) or on the Site, Contractor may use the District's existing utilities by making prearranged payments to the District for the utilities used by Contractor and all Subcontractors. Contractor shall be responsible for providing temporary facilities required to deliver that power service from its existing location in the building(s) or on the Site to point of intended use.

(2) Contractor shall verify characteristics of power available in building(s) or on the Site. Contractor shall take all actions required to make modifications where power of higher voltage or different phases of current are required. Contractor shall be fully responsible for providing that service and shall pay all costs required therefor.

(3) Contractor shall furnish, wire for, install, and maintain temporary electrical lights wherever it is necessary to provide illumination for the proper performance and/or observation of the Work: a minimum of 20 foot-candles for rough work and 50 foot-candles for finish work.

(4) Contractor shall be responsible for maintaining existing lighting levels in the project vicinity should temporary outages or service interruptions occur.

B. Heat and Ventilation:

(1) Contractor shall provide temporary heat to maintain environmental conditions to facilitate progress of the Work, to meet specified minimum conditions for the installation and curing of materials, and to

protect materials and finishes from damage due to improper temperature and humidity conditions. Portable heaters shall be standard units complete with controls.

(2) Contractor shall provide forced ventilation and dehumidification, as required, of enclosed areas for proper installation and curing of materials, to disperse humidity, and to prevent hazardous accumulations of dust, fumes, vapors, and gases.

(3) Contractor shall pay the costs of installation, maintenance, operation, and removal of temporary heat and ventilation, including costs for fuel consumed, required for the performance of the Work.

C. Water:

(1) Contractor shall pay for water used during the course of the Work. Contractor shall coordinate and pay for installation or use of water meter in compliance with local water agency requirements. To the extent water is then available in the building(s) or on the Site, Contractor may use the District's existing utilities by making prearranged payments to the District for the utilities used by Contractor and all Subcontractors. Contractor shall be responsible for providing temporary facilities required to deliver such utility service from its existing location in the building(s), on the Site, or other location approved by the local water agency, to point of intended use.

(2) Contractor shall use backflow preventers on water lines at point of connection to District's water supply. Backflow preventers shall comply with requirements of Uniform Plumbing Code.

(3) Contractor shall make potable water available for human consumption.

D. Sanitary Facilities:

(1) Contractor shall provide sanitary temporary facilities in no fewer numbers than required by law and such additional facilities as may be directed by the Inspector for the use of all workers. The facilities shall be maintained in a sanitary condition at all times and shall be left at the Site until removal is directed by the Inspector or Contractor completes all other work at the Site.

(2) Use of toilet facilities in the Work under construction shall not be permitted except by consent of the Inspector and the District.

E. Telephone Service:

(1) Contractor shall arrange with local telephone service company for telephone service as required for the performance of the Work. Contractor shall, at a minimum, provide in its field office one line for telephone and one line for fax machine.

(2) Contractor shall pay the costs for telephone and fax lines installation, maintenance, service, and removal.

F. Fire Protection:

(1) Contractor shall provide and maintain fire extinguishers and other equipment for fire protection. Such equipment shall be designated for use for fire protection only and shall comply with all requirements of the California Fire, State Fire Marshall and/or its designee.

(2) Where on-site welding and burning of steel is unavoidable, Contractor shall provide protection for adjacent surfaces.

G. Trash Removal:

(1) Contractor shall provide trash removal on a timely basis**.** Under no circumstance shall Contractor use District trash service.

H. Field Office:

(1) If Contractor chooses to provide a field office, it shall be an acceptable construction trailer that is well-lit and ventilated. The construction trailer shall be equipped with shelves, desks, filing cabinet, chairs, and such other items of equipment needed. Trailer and equipment are the property of the Contractor and must be removed from the Site upon completion of the Work. Contractor may use the corridor adjacent to the construction area for an office area, if approved in writing by District.

(2) Contractor shall provide any additional electric lighting and power required for the trailer. Contractor shall make adequate provisions for heating and cooling as required.

I. Temporary Facilities:

(1) Contractor shall have provide temporary construction fencing with vision screen as required.

38.03 CONSTRUCTION AIDS:

A. Plant and Equipment:

(1) Contractor shall furnish, operate, and maintain a complete plant for fabricating, handling, conveying, installing, and erecting materials and equipment; and for conveyances for transporting workers. Include elevators, hoists, debris chutes, and other equipment, tools, and appliances necessary for performance of the Work.

(2) Contractor shall maintain plant and equipment in safe and efficient operating condition. Damages due to defective plant and equipment, and uses made thereof, shall be repaired by Contractor at no expense to the District.

B. None of the District's tools and equipment shall be used by Contractor for the performance of the Work.

38.04 BARRIERS AND ENCLOSURES:

A. Contractor shall obtain the District's written permission for locations and types of temporary barriers and enclosures, including fire-rated materials proposed for use, prior to their installation.

B. Contractor shall provide and maintain temporary enclosures to prevent public entry and to protect persons using other buildings and portions of the Site and/or Premises, the public, and workers. Contractor shall also protect the Work and existing facilities from the elements, and adjacent construction and improvements, persons, and trees and plants from damage and injury from demolition and construction operations.

C. Contractor shall provide site access to existing facilities for persons using other buildings and portions of the Site, the public, and for deliveries and other services and activities.

D. Tree and Plant Protection:

(1) Contractor shall preserve and protect existing trees and plants on the Premises that are not designated or required to be removed, and those adjacent to the Premises.

(2) Contractor shall provide barriers to a minimum height of 4'-0" around drip line of each tree and plant, around each group of trees and plants, as applicable, in the proximity of demolition and construction operations, or as denoted on the Plans.

(3) Contractor shall not park trucks, store materials, perform Work or cross over landscaped areas. Contractor shall not dispose of paint thinners, water from cleaning, plastering or concrete operations, or other deleterious materials in landscaped areas, storm drain systems, or sewers. Plant materials damaged as a result of the performance of the Work shall, at the option of the District and at Contractor's expense, either be replaced with new plant materials equal in size to those damaged or by payment of an amount representing the value of the damaged materials as determined by the District.

(4) Contractor shall remove soil that has been contaminated during the performance of the Work by oil, solvents, and other materials which could be harmful to trees and plants, and replace with good soil, at Contractor's expense.

(5) Excavation around Trees:

(a) Excavation within drip lines of trees shall be done only where absolutely necessary and with written permission from the District.

(b) Where trenching for utilities is required within drip lines, tunneling under and around roots shall be by hand digging and shall be approved by the District. Main lateral roots and taproots shall not be cut. All roots 2 inches in diameter and

larger shall be tunneled under and heavily wrapped with wet burlap so as to prevent scarring or excessive drying. Smaller roots that interfere with installation of new work may be cut with prior approval by the District. Roots must first be cut with a Vermeer, or equivalent, root cutter prior to any trenching.

(c) Where excavation for new construction is required within drip line of trees, hand excavation shall be employed to minimize damage to root system. Roots shall be relocated in backfill areas wherever possible. If encountered immediately adjacent to location of new construction, roots shall be cut approximately 6 inches back from new construction.

(d) Approved excavations shall be carefully backfilled with the excavated materials approved for backfilling. Backfill shall conform to adjacent grades without dips, sunken areas, humps, or other surface irregularities. Do not use mechanical equipment to compact backfill. Tamp carefully using hand tools, refilling and tamping until Final Acceptance as necessary to offset settlement.

(e) Exposed roots shall not be allowed to dry out before permanent backfill is placed. Temporary earth cover shall be provided, or roots shall be wrapped with four layers of wet, untreated burlap and temporarily supported and protected from damage until permanently relocated and covered with backfill.

(f) Accidentally broken roots should be sawed cleanly 3 inches behind ragged end.

38.05 SECURITY:

The Contractor shall be responsible for project security for materials, tools, equipment, supplies, and completed and partially completed Work.

38.06 TEMPORARY CONTROLS:

A. Noise Control:

(1) Contractor acknowledges that adjacent facilities may remain in operation during all or a portion of the Work period, and it shall take all reasonable precautions to minimize noise as required by applicable laws and the Contract Documents.

(2) Notice of proposed noisy operations, including without limitation, operation of pneumatic demolition tools, concrete saws, and other equipment, shall be submitted to the District a minimum of forty-eight (48) hours in advance of their performance.

B. Noise and Vibration:

(1) Equipment and impact tools shall have intake and exhaust mufflers.

(2) Contractor shall cooperate with District to minimize and/or cease the use of noisy and vibratory equipment if that equipment becomes objectionable by its longevity.

C. Dust and Dirt:

(1) Contractor shall conduct demolition and construction operations to minimize the generation of dust and dirt, and prevent dust and dirt from interfering with the progress of the Work and from accumulating in the Work and adjacent areas including, without limitation, occupied facilities.

(2) Contractor shall periodically water exterior demolition and construction areas to minimize the generation of dust and dirt.

(3) Contractor shall ensure that all hauling equipment and trucks carrying loads of soil and debris shall have their loads sprayed with water or covered with tarpaulins, and as otherwise required by local and state ordinance.

(4) Contractor shall prevent dust and dirt from accumulating on walks, roadways, parking areas, and planting, and from washing into sewer and storm drain lines.

D. Water:

(1) Contractor shall not permit surface and subsurface water, and other liquids, to accumulate in or about the vicinity of the Premises. Should accumulation develop, Contractor shall control the water or other liquid, and suitably dispose of it by means of temporary pumps, piping, drainage lines, troughs, ditches, dams, or other methods.

E. Pollution:

(1) No burning of refuse, debris, or other materials shall be permitted on or in the vicinity of the Premises.

(2) Contractor shall comply with applicable regulatory requirements and anti-pollution ordinances during the conduct of the Work including, without limitation, demolition, construction, and disposal operations.

F. Lighting:

(1) If portable lights are used after dark, all light must be located so as not to direct light into neighboring property.

38.07 JOB SIGN(S):

A. General:

(1) Contractor shall provide and maintain a Project identification sign with the design, text, and colors designated by the District and/or the Design Professional; locate sign as approved by the District.

(2) Signs other than the specified Project sign and or signs required by law, for safety, or for egress, shall not be permitted, unless otherwise approved in advance by the District.

B. Materials:

(1) Structure and Framing: Structurally sound, new or used wood or metal; wood shall be nominal 3/4-inch exterior grade plywood.

(2) Sign Surface: Minimum 3/4-inch exterior grade plywood.

(3) Rough Hardware: Galvanized.

(4) Paint: Exterior quality, of type and colors selected by the District and/or the Design Professional.

C. Fabrication:

(1) Contractor shall fabricate to provide smooth, even surface for painting.

(2) Size: 4'-0" x 8'-0", unless otherwise indicated.

(3) Contractor shall paint exposed surfaces of supports, framing, and surface material with exterior grade paint: one coat of primer and one coat of finish paint.

(4) Text and Graphics: As indicated.

38.08 PUBLICITY RELEASES:

A. Contractor shall not release any information, story, photograph, plan, or drawing relating information about the Project to anyone, including press and other public communications medium, including, without limitation, on website(s) without the written permission of the District.

PART 39 – PRODUCTS Not used.

PART 40 – EXECUTION Not used.

END OF DOCUMENT

DOCUMENT 01 50 13

CONSTRUCTION WASTE MANAGEMENT AND DISPOSAL

PART 41 - GENERAL

41.01 RELATED DOCUMENTS AND PROVISIONS:

All Contract Documents should be reviewed for applicable provisions related to the provisions in this document, including without limitation:

A. General Conditions;

B. Special Conditions; and

C. Temporary Facilities and Controls.

41.02 SECTION INCLUDES:

A. Administrative and procedural requirements for the following:

(1) Salvaging non-hazardous construction waste.

(2) Recycling non-hazardous construction waste.

(3) Disposing of non-hazardous construction waste.

41.03 DEFINITIONS:

A. Construction Waste: Building and site improvement materials and other solid waste resulting from construction, remodeling, renovation, or repair operations. Construction waste includes packaging.

B. Demolition Waste: Building and site improvement materials resulting from demolition or selective demolition operations.

C. Disposal: Removal off-site of demolition and construction waste and subsequent sale, recycling, reuse, or deposit in landfill or incinerator acceptable to authorities having jurisdiction.

D. Recycle: Recovery of demolition or construction waste for subsequent processing in preparation for reuse.

E. Salvage: Recovery of demolition or construction waste and subsequent sale or reuse in another facility.

F. Salvage and Reuse: Recovery of demolition or construction waste and subsequent incorporation into the Work.

41.04 PERFORMANCE REQUIREMENTS:

A. General: Develop waste management plan that results in end-of Project rates for salvage/recycling of sixty-five percent (65%) by weight (or by volume, but not a combination) of total waste generated by the Work.

41.05 SUBMITTALS:

A. Waste Management Plan: Submit waste management plan within 30 days of date established for commencement of the Work.

B. Waste Reduction Progress Reports: Concurrent with each Application for Payment, submit copies of report. Include the following information:

(1) Material category.

(2) Generation point of waste.

(3) Total quantity of waste in tons or cubic yards.

(4) Quantity of waste salvaged, both estimated and actual in tons or cubic yards.

(5) Quantity of waste recycled, both estimated and actual in tons or cubic yards.

(6) Total quantity of waste recovered (salvaged plus recycled) in tons or cubic yards.

(7) Total quantity of waste recovered (salvaged plus recycled) as a percentage of total waste.

C. Waste Reduction Calculations: Before request for final payment, submit copies of calculated end-of-Project rates for salvage, recycling, and disposal as a percentage of total waste generated by the Work.

D. Records of Donations: Indicate receipt and acceptance of salvageable waste donated to individuals and organizations. Indicate whether organization is tax exempt.

E. Records of Sales: Indicate receipt and acceptance of salvageable waste sold to individuals and organizations. Indicate whether organization is tax exempt.

F. Recycling and Processing Facility Records: Indicate receipt and acceptance of recyclable waste by recycling and processing facilities licensed to accept them. Include manifests, weight tickets, receipts, and invoices.

G. Landfill and Incinerator Disposal Records: Indicate receipt and acceptance of waste by landfills and incinerator facilities licensed to accept them. Include manifests, weight tickets, receipts, and invoices.

H. Qualification Data: For Waste Management Coordinator.

I. Statement of Refrigerant Recovery: Signed by refrigerant recovery technician responsible for recovering refrigerant, stating that all refrigerant that was present was recovered and that recovery was performed according to EPA regulations. Include name and address of technician and date refrigerant was recovered.

J. Submittal procedures and quantities are specified in Document 01 33 00.

41.06 QUALITY ASSURANCE:

A. Waste Management Coordinator Qualifications: LEED Accredited Professional by U.S. Green Building Council.

B. Regulatory Requirements: Comply with hauling and disposal regulations of authorities having jurisdiction.

C. Waste Management Conference: Conduct conference at Project site to comply with requirements. Review methods and procedures related to waste management including, but not limited to, the following:

(1) Review and discuss waste management plan including responsibilities of Waste Management Coordinator.

(2) Review requirements for documenting quantities of each type of waste and its disposition.

(3) Review and finalize procedures for materials separation and verify availability of containers and bins needed to avoid delays.

(4) Review procedures for periodic waste collection and transportation to recycling and disposal facilities.

(5) Review waste management requirements for each trade.

41.07 WASTE MANAGEMENT PLAN:

A. General: Develop plan consisting of waste identification, waste reduction work plan, and cost/revenue analysis. Indicate quantities by weight or volume, but use same units of measurement throughout waste management plan.

B. Waste Identification: Indicate anticipated types and quantities of site-clearing and construction waste generated by the Work. Include estimated quantities and assumptions for estimates.

C. Waste Reduction Work Plan: List each type of waste and whether it will be salvaged, recycled, or disposed of in landfill or incinerator. Include points of waste generation, total quantity of each type of waste, quantity for each means of recovery, and handling and transportation procedures.

(1) Salvaged Materials for Reuse: For materials that will be salvaged and reused in this Project, describe methods for preparing salvaged materials before incorporation into the Work.

(2) Salvaged Materials for Sale: For materials that will be sold to individuals and organizations, include list of their names, addresses, and telephone numbers.

(3) Salvaged Materials for Donation: For materials that will be donated to individuals and organizations, include list of their names, addresses, and telephone numbers.

(4) Recycled Materials: Include list of local receivers and processors and type of recycled materials each will accept. Include names, addresses, and telephone numbers.

(5) Disposed Materials: Indicate how and where materials will be disposed of. Include name, address, and telephone number of each landfill and incinerator facility.

(6) Handling and Transportation Procedures: Include method that will be used for separating recyclable waste including sizes of containers, container labeling, and designated location on Project site where materials separation will be located.

PART 42 - PRODUCTS Not Used.

PART 43 - EXECUTION

43.01 PLAN IMPLEMENTATION:

A. General: Implement approved waste management plan. Provide handling, containers, storage, signage, transportation, and other items as required to implement waste management plan during the entire duration of the Contract.

(1) Comply with Document 01 50 00 for operation, termination, and removal requirements.

B. **[**Waste Management Coordinator: Engage a waste management coordinator to be responsible for implementing, monitoring, and reporting status of waste management work plan. Coordinator shall be present at Project site full time for duration of Project.**]**

C. Training: Train workers, subcontractors, and suppliers on proper waste management procedures, as appropriate for the Work occurring at Project site.

(1) Distribute waste management plan to everyone concerned within 3 days of submittal return.

(2) Distribute waste management plan to entities when they first begin work on site. Review plan procedures and locations established for salvage, recycling, and disposal.

D. Site Access and Temporary Controls: Conduct waste management operations to ensure minimum interference with roads, streets, walks, walkways, and other adjacent occupied and used facilities.

(1) Designate and label specific areas of Project site necessary for separating materials that are to be salvaged, recycled, reused, donated, and sold.

(2) Comply with Document 01 50 00 for controlling dust and dirt, environmental protection, and noise control.

43.02 RECYCLING CONSTRUCTION WASTE:

A. General: Recycle paper and beverage containers used by on-site workers.

B. Recycling Incentives: Revenues, savings, rebates, tax credits, and other incentives received for recycling waste materials shall accrue to the Contractor.

C. Procedures: Separate recyclable waste from other waste materials, trash, and debris. Separate recyclable waste by type at Project site to the maximum extent practical.

(1) Provide appropriately marked containers or bins for controlling recyclable waste until they are removed from Project Site. Include list of acceptable and unacceptable materials at each container and bin.

(a) Inspect containers and bins for contamination and remove contaminated materials if found.

(2) Stockpile processed materials on site without intermixing with other materials. Place, grade, and shape stockpiles to drain surface water. Cover to prevent windblown dust.

(3) Stockpile materials away from construction area. Do not store within drip line of remaining trees.

(4) Store components off the ground and protect from the weather.

(5) Remove recyclable waste off District property and transport to recycling receiver or processor.

D. Packaging:

(1) Cardboard and Boxes: Break down packaging into flat sheets. Bundle and store in a dry location.

(2) Polystyrene Packaging: Separate and bag material.

(3) Pallets: As much as possible, require deliveries using pallets to remove pallets from Project Site. For pallets that remain on Site, break down pallets into component wood pieces and comply with requirements for recycling wood.

(4) Crates: Break down crates into component wood pieces and comply with requirements for recycling wood.

E. Site-Clearing Wastes: Chip brush, branches, and trees on site.

F. Wood Materials:

(1) Clean Cut-Offs of Lumber: Grind or chip into small pieces.

(2) Clean Sawdust: Bag sawdust that does not contain painted or treated wood.

G. Gypsum Board: Stack large clean pieces on wood pallets and store in a dry location.

(1) Clean Gypsum Board: Grind scraps of clean gypsum board using small mobile chipper or hammer mill. Screen out paper after grinding.

43.03 DISPOSAL OF WASTE:

A. General: Except for items or materials to be salvaged, recycled, or otherwise reused, remove waste materials from Project Site and legally dispose of them in a landfill or incinerator acceptable to authorities having jurisdiction.

(1) Except as otherwise specified, do not allow waste materials that are to be disposed of accumulate on site.

(2) Remove and transport debris in a manner that will prevent spillage on adjacent surfaces and areas.

B. Burning: Do not burn waste materials.

C. Disposal: Transport waste materials off District property and legally dispose of them.

END OF DOCUMENT

DOCUMENT 01 52 13

FIELD OFFICES

PART 44 – GENERAL

44.01 RELATED DOCUMENTS AND PROVISIONS:

All Contract Documents should be reviewed for applicable provisions related to the provisions in this document, including without limitation:

A. General Conditions;

B. Special Conditions; and

C. Temporary Facilities and Controls.

44.02 SECTION INCLUDES:

A. Requirements for Field Offices and Field Office Trailers.

44.03 SUMMARY:

A. General: Contractor shall provide District's Field Office Trailer and contents, for District's use exclusively, during the term of the Contract.

B. Property: Trailer, furniture, furnishings, equipment, and the like, supplied by the Contractor with the Office Trailer shall remain the property of the Contractor; District property items installed, delivered, and the like by District within the Office Trailer will remain District's property.

C. Modifications: District reserves the right to modify the trailer or contents, or both, as may be deemed proper by District.

D. Condition: Trailer and contents shall be clean, neat, substantially finished, in good, proper, and safe condition for use, operation, and the like; the trailer and contents shall not be required to be new.

E. Installation Timing: Provide safe, fully furnished, functional, proper, complete, and finished trailer properly ready for entire use, within fourteen (14) calendar days of District's notification of the issuance of Notice to Proceed.

44.04 SUBMITTALS:

A. General: Submit submittals to District in quantity, format, type, and the like, as specified herein.

B. Office Trailer Data: One (1) copy of manufacturer's descriptive data, technical descriptions, regulatory compliance, industry standards, installation, removal, and maintenance instructions.

C. Equipment Data: Two (2) copies of manufacturer data for each type of equipment, if directed by District.

D. Furniture and Furnishings Data: Two (2) copies of manufacturer data for each type of equipment, if directed by District.

E. Plans: One (1) reproducible copy of appropriately scaled plans of trailer layout. Plans shall include, but not be limited to: lighting; furniture; equipment; telephone and electrical outlets; and the like.

F. Product Samples: One (1) complete and entire unit of each type, if directed by District.

44.05 QUALITY ASSURANCE

A. Standards: In the event that provisions of codes, regulations, safety orders, Contract Documents, referenced manufacturer's specifications, manufacturer's instructions, industry standards, and the like, are in conflict, the more restrictive and higher quality shall govern.

B. Installer: Installer or Installers engaged by Contractor must have a minimum of five (5) years of documented and properly authenticated successful experience of specialization in the installation of the items or systems, or both, specified herein.

C. Manufacturer: Contractor shall obtain products from nationally and industry recognized Manufacturer with five (5) years minimum, of immediately recent, continuous, documented and properly authenticated successful experience of specialization in the manufacture of the product specified herein.

D. State Personnel Training: Provide proper training for maintenance and operations, including emergency procedures, and the like, as directed by District.

E. Units: Shall be sound and free of defects, and shall not include any damage or defect that will impair the safety, installation, performance, or the durability of the entire Office Trailer and appurtenant systems.

44.06 REGULATORY REQUIREMENTS

A. General: Work shall be executed in accordance with applicable Codes, Regulations, Statutes, Enactments, Rulings, Laws, each authority having jurisdiction, and including, but not limited to, Regulatory Requirements specified herein.

B. California Building Standards Code ("CBSC").

C. California Code of Regulations, Title 25, Chapter 3, Sub Chapter 2, Article 3 ("CCR").

D. Coach Insignia: Trailer shall display California Commercial Coach Insignia; such insignia shall be deemed to show that the trailer is in accordance with the Construction and Fire Safety requirements of CCR.

PART 45 – PRODUCTS

45.01 FIELD OFFICE TRAILER

A. General: Provide entire Field Office Trailer of type, function, operation, capacity, size, complete with controls, safety devices, accessories, and the like, for proper and durable installation. Partitions, walls, ceiling, and other interior and exterior surfaces shall be appropriately finished, including, but not limited to, trim, painting, wall base, floor covering, suspended or similar ceiling, and the like; provide systems, components, units, nuts, bolts, screws, anchoring devices, fastening devices, washers, accessories, adhesives, sealants, and other items of type, grade, and class required for the particular use, not identified but required for a complete, weather-tight, appropriately operating, and finished installation.

B. Manufacturers: General Electric Capital Modular Space; The Space Place, Inc.; or equal.

C. Program: Provide a wheel-mounted trailer with stairs, landings, platforms, ramps, and the like, in good, proper, safe, clean, and properly finished condition; with proper heavy duty locks, and other proper and effective security at all doors, windows, and the like. Trailer shall be maintained in good, proper, safe, clean, and properly finished condition during the Contract.

(1) Nominal Trailer Size: Four hundred eighty (480) square feet, minimum.

(2) Stairs, Platform: Properly finished stairs, platforms, and ramps.

(3) Doors: Two (2), three (3) foot wide exterior doors with locksets; finished ramp, steps, and entry platform at each exterior door.

(4) Keys: Submit five (5) keys for each door, window, furniture unit, and the like. There shall be no other key copies or originals available; each key shall be identified for District; and shall be labeled, or tagged or both, as directed by District.

(5) Lighting: Sixty-five (65) foot-candles illumination minimum at any point, at thirty (30) inches above finished floor throughout from fluorescent light source, exclusively, or as directed by District.

(6) Electrical Outlets: One (1) duplex outlet evenly spaced every twelve (12) linear horizontal feet of wall face, and electrical service ready for use.

(7) Telephones and Telephone Outlets: Two (2) telephone lines wired, connected to telephone utility service, and ready for use, and two (2) telephone instruments, each with two (2)-line capability, speed dial and hands-free feature. Locate each outlet as directed by District.

45.02 FIELD OFFICE TRAILER ITEMS

A. General: Provide the Field Office Trailer with the following arranged into two (2) workstations:

(1) Desks: Two (2) desks: thirty-six (36) inches by sixty (60) inches; steel, laminated plastic top; locking, one (1) or two (2) file drawers single pedestal; steel; provide five (5) keys to District.

(2) Tables: Two (2) tables; thirty-six (36) inches by sixty (60) inches; twenty-nine (29) inches high; steel, laminated plastic top tables; one (1) at each desk.

(3) Chairs: Two (2) chairs: swivel; steel; with seat cushion and arms; one (1) at each desk.

(4) Waste Baskets: Two (2) waste baskets, one at each desk.

B. Furniture and Equipment: Provide in the space located to effect efficient and logical use.

(1) File cabinet: One (1); four (4) drawer; lateral; steel locking.

(2) Plan Table: One (1) plan table: thirty-six (36) inches deep by seventy-two (72) inches wide by forty-two (42) inches high; adjustable; wood or steel; with lockable plan and pencil drawers.

(3) Drafting Stool: One (1) drafting stool; swiveling; steel; padded; adjustable; with footrest and casters.

(4) Bookshelf: One (1) bookshelf: thirty-six (36) inches deep by seventy-two (72) inches wide by forty-two (42) inches high; adjustable; wood or steel; with lockable plan and pencil drawer.

(5) Plan Rack: One (1) wheel mounted plan rack.

(6) Waste Baskets: One (1) large waste basket.

(7) Coat/Hat Hanger: Wall mounted with minimum capacity for four (4) garments and ten (10) hats.

(8) Document Management System: Shall include an integrated high-volume printer, copier, and facsimile machine, including stand, base, and storage cabinet; and shall include the following features:

(a) Type: Laser, dry electrostatic transfer, plain paper, digital, multi-function imaging system.

(b) Network: Ethernet or Token Ring network ready, Plug-and-Play.

(c) Print, send/receive facsimile from any connected workstation.

(d) Resolution: Six hundred (600) dots per inch by six hundred (600) dots per inch, minimum.

(e) Print Speed: Twenty (20) pages per minute, minimum.

(f) Copies: Twenty (20) copies per minute, minimum.

(g) Document Handler: Forty (40) sheet, minimum

(h) Collator: Forty (40) bin, minimum, with stapling.

(i) Duplexing: Capable.

(j) Paper Size: Capable of handling paper sizes to eleven (11) inches by seventeen (17) inches.

(k) Paper Cassettes: One (1) each for eight and one half (8.5) inches by eleven (11) inches, eight and one half (8.5) inches by fourteen (14) inches, and eleven (11) inches by seventeen (17) inches paper sizes; minimum two hundred fifty (250) sheets per cassette.

(l) Reduction/Enlargement: Capable of reduction to twenty-five percent (25%) and enlargement to two hundred percent (200%).

(m) Facsimile Electronic Storage: Capable of storing minimum of fifty (50) speed dial numbers, group faxing and broadcast faxing.

(n) Facsimile Scanning: Capable of scanning into memory a minimum of one hundred (100) pages with maximum scan time of three (3) seconds per page.

(o) Halftone: Sixty-four (64) levels.

(p) Redial: Automatic and Manual.

(9) Maintenance: Contractor shall purchase service agreements for each unit of equipment for the duration of the project plus two (2) months, and shall maintain all equipment in proper working condition. Service agreements shall include provision for replacement of toner cartridges and other items required to effect proper unit use. Service agreements shall also provide for:

(a) Unlimited Service Calls.

(b) Same Day Response.

(c) All parts, labor, preventative maintenance and mileage.

(d) All chemicals, such as toner, fixing agent, and the like.

(e) System training and setup.

(10) Portable Toilets: Two (2); each shall include a urinal; each unit shall be a properly enclosed chemical unit conforming to ANSI Z4.3.

(a) Location: As directed by District.

(b) Maintenance: Maintain each unit and surrounding areas in a clean, hygienic and orderly manner, at all time. Empty, clean, and sanitize each unit each day at a location and time as directed by District.

(c) Removal: Relocate, or remove from the site, each Portable Toilet. Upon such directive by District, the Contractor shall forthwith relocate or remove each Portable Toilet and submit the affected areas to a condition which existed prior to the installation of each Portable Toilet, within three (3) calendar days, or as directed by District in writing, at no cost to District.

45.03 UTILITY AND SERVICES

A. Telephone Service: Contractor shall provide and interface the entire telephone service, and shall properly and timely pay for telephone service for District's non-long-distance use.

B. Electrical Service: Provide all proper connections and continuously pay for service for the duration of the Work.

45.04 FINISHES

A. General: Manufacturer standard finish system over surfaces properly cleaned, pretreated, and prepared to obtain proper bond; all visible surfaces shall be coated.

B. Finish: Color as selected by District from manufacturer standard palette.

PART 46 – EXECUTION

46.01 INSTALLATION

A. General: Properly prepare area and affected items to receive the Work. Set Work accurately in location, alignment, and elevation; rigidly, securely, and firmly anchor to appropriate structure; install plumb, straight, square, level, true, without racking, rigidly anchored to proper solid blocking, substrate, and the like; provide appropriate type and quantity of reinforcements, fasteners, adhesives, self-adhesive and other tapes; lubricants, coatings, accessories, and the like, as required for a complete, structurally rigid, stable, sound, and appropriately finished installation, in accordance with manufacturer's published instructions, and as indicated. The more restrictive and higher quality requirement shall govern. Moving parts shall be properly secured, without binding, looseness, noise, and the like.

B. Installation: Install in accordance with 25 CCR 3.2.3 and as directed by District; jack up trailer and level both ways; mount on proper concrete piers with all load off wheels; provide required tie down and accessories per Section 4368 of referenced CCR, and as directed by District.

C. Rejected Work: Work, materials, unit, items, systems, and the like, not accepted by District shall be deemed rejected, and shall forthwith be removed and replaced with proper and new Work, materials, unit, items, systems, and the like at no cost to District.

D. Standard: Comply with manufacturer's published instructions, or with instructions as shown or indicated; the more restrictive and higher quality requirement shall govern.

E. Location: As directed by District.

F. Fire Resistance: Construct and install in accordance with UL requirements.

G. Maintenance: Contractor shall maintain trailer and adjacent areas in a safe, clean and hygienic condition throughout the duration of the Work, and as directed by District. Properly repair or replace furniture or other items, as directed by District. Properly remove unsafe, damaged, or broken furniture, or similar items, and replace with safe and proper items. Contractor shall pay cost of all services, repair, and maintenance, or replacement of each item.

H. Janitorial Service: Provide professional janitorial services, including, but not limited to, trash, waste paper baskets, fill paper dispensers; clean and dust all furniture, files, and the like; sweep and mop resilient and similar flooring; and vacuum carpeting and similar flooring.

(1) Frequency: Two (2) times per week, minimum.

I. Removal: Properly remove the Office Trailer and contents from the Site upon completion of the Contract, or as directed by District in writing. Forthwith properly patch and repair affected areas; replace damaged items with new items. Carefully and properly inventory, clean, pack, store, and protect District property; submit District property to District at a date, time and location as directed by District.

END OF DOCUMENT

(a) Rough in locations, sizes, capacities, and similar type items shall be as indicated and required by product manufacturer.

B. Owner and Installing Contractor(s) Responsibilities:

(1) Owner-Furnished/Contractor Installed ("OFCI"): Furnished by the Owner; installed by the Installing Contractor.

(a) General: Owner and Installing Contractor(s) will coordinate deliveries of materials and equipment to coincide with the construction schedule.

(b) Owner will furnish specified materials and equipment delivered to the site. Owner/vendor's representative shall be present on Site at the time of delivery to comply with the contract requirements.

(c) The Owner furnishing specified materials and equipment is responsible to provide manufacturer guarantees as required by the Contract to the Installing Contractor.

(d) The Installing Contractor shall:

1) Review, verify and accept the approved manufacturer's submittal/Shop Drawings for all materials and equipment required to be installed by the Installer Contractor and furnished by the Owner. Any discrepancies, including but not limited to possible space conflicts, should be brought to the attention of the Project Manager and/or Program Manager, if applicable.

2) Coordinate timely delivery. Installing Contractor shall receive materials and equipment at Site when delivered and give written receipt at time of delivery, noting visible defects or omissions; if such declaration is not given, the Installing Contractor shall assume responsibility for such defects and omissions.

3) Store materials and equipment until ready for installation and protect from loss and damage. Installing Contractor is responsible for providing adequate storage space.

4) Coordinate with other bid package contractors and field measurement to ensure complete installation.

5) Uncrate, assemble, and set in place.

6) Provide adequate supports.

7) Install materials and equipment in accordance with manufacturer's recommendations, instructions, and Shop Drawings, supply labor and material required, and

make mechanical, plumbing, and electrical connections required to operate equipment.

8) Be certified by equipment manufacturer for installation of the specific equipment supplied by the Owner.

9) Provide anchorage and/or bracing as required for seismic restraint per Title 24, UBC Standard 27-11 and all other applicable codes.

10) Provide the contract-required warranty and guarantee for all work, materials and equipment, and installation upon its completion and acceptance by the District. Guarantee includes all costs associated with the removal, shipping to and from the Site, and re-installation of any equipment found to be defective.

C. Compatibility with Space and Service Requirements:

(1) Equipment items shall be compatible with space limitations indicated and as shown on the Contract Documents and specified in other sections of the Specifications.

(2) Modifications to equipment items required to conform to space limitations specified for rough in shall not cause additional cost to the District.

D. Manufacturer's printed descriptions, specifications, and instructions shall govern the Work unless specifically indicated or specified otherwise.

48.02 FURNISHED MATERIALS AND EQUIPMENT

A. All furnished materials and equipment are indicated or scheduled on the Contract Documents.

PART 49 – EXECUTION

49.01 INSTALLATION

A. Install equipment items in accordance with the manufacturer's instructions.

B. Set equipment items securely in place, rigidly or flexibly mounted in accordance with manufacturers' directions.

C. Make electrical and mechanical connections as indicated and required.

D. Touch-up and restore damaged or defaced finishes to the Owner's satisfaction.

49.02 CLEANING AND PROTECTION

A. Repair or replace items not acceptable to the Architect or Owner.

B. Upon completion of installation, clean equipment items in accordance with manufacturer's recommendations, and protect from damage until final acceptance of the Work by the Owner.

END OF DOCUMENT

SECTION 01 66 00

PRODUCT DELIVERY, STORAGE AND HANDLING

PART 50 - GENERAL

50.01 RELATED DOCUMENTS AND PROVISIONS

All Contract Documents should be reviewed for applicable provisions related to the provisions in this document, including without limitation:

A. General Conditions, including, without limitation, Site Access, Conditions and Requirements;

B. Special Conditions.

50.02 PRODUCTS

A. Products are as defined in the General Conditions.

B. Contractor shall not use and/or reuse materials and/or equipment removed from existing Premises, except as specifically permitted by the Contract Documents.

C. Contractor shall provide interchangeable components of the same manufacturer, for similar components.

50.03 TRANSPORTATION AND HANDLING

A. Contractor shall transport and handle Products in accordance with manufacturer's instructions.

B. Contractor shall promptly inspect shipments to confirm that Products comply with requirements, quantities are correct, and products are undamaged.

C. Contractor shall provide equipment and personnel to handle Products by methods to prevent soiling, disfigurement, or damage.

50.04 STORAGE AND PROTECTION

A. Contractor shall store and protect Products in accordance with manufacturer's instructions, with seals and labels intact and legible. Contractor shall store sensitive products in weather-tight, climate controlled enclosures.

B. For exterior storage of fabricated Products, Contractor shall place on sloped supports, above ground.

C. Contractor shall provide off-site storage and protection when Site does not permit on-site storage or protection.

D. Contractor shall cover products subject to deterioration with impervious sheet covering and provide ventilation to avoid condensation.

E. Contractor shall store loose granular materials on solid flat surfaces in a well-drained area and prevent mixing with foreign matter.

F. Contractor shall provide equipment and personnel to store Products by methods to prevent soiling, disfigurement, or damage.

G. Contractor shall arrange storage of Products to permit access for inspection and periodically inspect to assure Products are undamaged and are maintained under specified conditions.

PART 51 – PRODUCTS Not Used.

PART 52 - EXECUTION Not Used.

END OF DOCUMENT

DOCUMENT 01 71 23

FIELD ENGINEERING

PART 53 - GENERAL

53.01 RELATED DOCUMENTS AND PROVISIONS:

All Contract Documents should be reviewed for applicable provisions related to the provisions in this document, including without limitation:

A. General Conditions, including, without limitation, Site Investigation, and Soils Investigation Report;

B. Special Conditions;

C. Site-Visit Certification.

53.02 REQUIREMENTS INCLUDED:

A. Contractor shall provide and pay for field engineering services by a California-registered engineer, required for the project, including, without limitations:

(1) Survey work required in execution of the Project.

(2) Civil or other professional engineering services specified, or required to execute Contractor's construction methods.

53.03 QUALIFICATIONS OF SURVEYOR OR ENGINEERS:

Contractor shall only use a qualified licensed engineer or registered land surveyor, to whom District makes no objection.

53.04 SURVEY REFERENCE POINTS:

A. Existing basic horizontal and vertical control points for the Project are those designated on the Drawings.

B. Contractor shall locate and protect control points prior to starting Site Work and preserve all permanent reference points during construction. In addition Contractor shall:

(1) Make no changes or relocation without prior written notice to District and Architect.

(2) Report to District and Architect when any reference point is lost or destroyed, or requires relocation because of necessary changes in grades or locations.

(3) Require surveyor to replace Project control points based on original survey control that may be lost or destroyed.

53.05 RECORDS:

Contractor shall maintain a complete, accurate log of all control and survey work as it progresses.

53.06 SUBMITTALS:

A. Contractor shall submit name and address of Surveyor and Professional Engineer to District and Architect prior to its/their work on the Project.

B. On request of District and Architect, Contractor shall submit documentation to verify accuracy of field engineering work, at no additional cost to the District.

C. Contractor shall submit a certificate signed by registered engineer or surveyor certifying that elevations and locations of improvements are in conformance or nonconformance with Contract Documents.

PART 54 – PRODUCTS Not Used.

PART 55 - EXECUTION

55.01 COMPLIANCE WITH LAWS:

Contractor is responsible for meeting all applicable codes, OSHA, safety and shoring requirements.

55.02 NONCONFORMING WORK:

Contractor is responsible for any re-surveying required by correction of nonconforming work.

END OF DOCUMENT

DOCUMENT 01 73 29

CUTTING AND PATCHING

PART 56 – GENERAL

56.01 RELATED DOCUMENTS AND PROVISIONS:

All Contract Documents should be reviewed for applicable provisions related to the provisions in this document, including without limitation:

A. General Conditions, including, without limitation, Inspector, Inspections, and Tests, Integration of Work, Nonconforming Work, and Correction of Work, and Uncovering Work;

B. Special Conditions;

C. Hazardous Materials Procedures and Requirements;

D. Hazardous Materials Certification;

E. Lead-Based Paint Certification;

F. Imported Materials Certification.

56.02 CUTTING AND PATCHING:

A. Contractor shall be responsible for all cutting, fitting, and patching, including associated excavation and backfill, required to complete the Work or to:

(1) Make several parts fit together properly.

(2) Uncover portions of Work to provide for installation of ill-timed Work.

(3) Remove and replace defective Work.

(4) Remove and replace Work not conforming to requirements of Contract Documents.

(5) Remove Samples of installed Work as specified for testing.

(6) Provide routine penetrations of non-structural surfaces for installation of piping and electrical conduit.

(7) Attaching new materials to existing remodeling areas – including painting (or other finishes) to match existing conditions.

B. In addition to Contract requirements, upon written instructions from the District, Contractor shall uncover Work to provide for observations of covered Work in accordance with the Contract Documents; remove samples of installed materials for testing as directed by District; and remove Work to provide for alteration of existing Work.

C. Contractor shall not cut or alter Work, or any part of it, in such a way that endangers or compromises the integrity of the Work, the Project, or work of others.

56.03 SUBMITTALS:

A. Prior to any cutting or alterations that may affect the structural safety of Project, or work of others, and well in advance of executing such cutting or alterations, Contractor shall submit written notice to District pursuant to the applicable notice provisions of the Contract Documents, requesting consent to proceed with the cutting or alteration, including the following:

(1) The work of the District or other trades.

(2) Structural value or integrity of any element of Project.

(3) Integrity or effectiveness of weather-exposed or weather-resistant elements or systems.

(4) Efficiency, operational life, maintenance or safety of operational elements.

(5) Visual qualities of sight-exposed elements.

B. Contractor's Request shall also include:

(1) Identification of Project.

(2) Description of affected Work.

(3) Necessity for cutting, alteration, or excavations.

(4) Effects of Work on District, other trades, or structural or weatherproof integrity of Project.

(5) Description of proposed Work:

(a) Scope of cutting, patching, alteration, or excavation.

(b) Trades that will execute Work.

(c) Products proposed to be used.

(d) Extent of refinishing to be done.

(6) Alternates to cutting and patching.

(7) Cost proposal, when applicable.

(8) The scheduled date the Contractor intends to perform the Work and the duration of time to complete the Work.

(9) Written permission of District or other District contractor(s) whose work will be affected.

56.04 QUALITY ASSURANCE:

A. Contractor shall ensure that cutting, fitting, and patching shall achieve security, strength, weather protection, appearance for aesthetic match, efficiency, operational life, maintenance, safety of operational elements, and the continuity of existing fire ratings.

B. Contractor shall ensure that cutting, fitting, and patching shall successfully duplicate undisturbed adjacent profiles, materials, textures, finishes, colors, and that materials shall match existing construction. Where there is dispute as to whether duplication is successful or has been achieved to a reasonable degree, the District's decision shall be final.

56.05 PAYMENT FOR COSTS:

A. Cost caused by ill-timed or defective Work or Work not conforming to Contract Documents, including costs for additional services of the District, its consultants, including but not limited to the Construction Manager, the Architect, the Project Inspector(s), Engineers, and Agents, will be paid by Contractor and/or deducted from the Contract by the District.

B. District shall only pay for cost of Work if it is part of the original Contract Price or if a change has been made to the contract in compliance with the provisions of the General Conditions. Cost of Work performed upon instructions from the District, other than defective or nonconforming Work, will be paid by District on approval of written Change Order. Contractor shall provide written cost proposals prior to proceeding with cutting and patching.

PART 57 - PRODUCTS

57.01 MATERIALS:

A. Contractor shall provide for replacement and restoration of Work removed. Contractor shall comply with the Contract Documents and with the Industry Standard(s), for the type of Work, and the Specification requirements for each specific product involved. If not specified, Contractor shall first recommend a product of a manufacturer or appropriate trade association for approval by the District.

B. Materials to be cut and patched include those damaged by the performance of the Work.

PART 58 – EXECUTION

58.01 INSPECTION:

A. Contractor shall inspect existing conditions of the Site and the Work, including elements subject to movement or damage during cutting and patching, excavating and backfilling. After uncovering Work, Contractor shall inspect conditions affecting installation of new products.

B. Contractor shall report unsatisfactory or questionable conditions in writing to District as indicated in the General Conditions and shall proceed with Work as indicated in the General Conditions by District.

58.02 PREPARATION:

A. Contractor shall provide shoring, bracing and supports as required to maintain structural integrity for all portions of the Project, including all requirements of the Project.

B. Contractor shall provide devices and methods to protect other portions of Project from damage.

C. Contractor shall, provide all necessary protection from weather and extremes of temperature and humidity for the Project, including without limitation, any work that may be exposed by cutting and patching Work. Contractor shall keep excavations free from water.

58.03 ERECTION, INSTALLATION AND APPLICATION:

A. With respect to performance, Contractor shall:

(1) Execute fitting and adjustment of products to provide finished installation to comply with and match specified tolerances and finishes.

(2) Execute cutting and demolition by methods that will prevent damage to other Work, and provide proper surfaces to receive installation of repairs and new Work.

(3) Execute cutting, demolition excavating, and backfilling by methods that will prevent damage to other Work and damage from settlement.

B. Contractor shall employ original installer or fabricator to perform cutting and patching for:

(1) Weather-exposed surfaces and moisture-resistant elements such as roofing, sheet metal, sealants, waterproofing, and other trades.

(2) Sight-exposed finished surfaces.

C. Contractor shall execute fitting and adjustment of products to provide a finished installation to comply with specified products, functions, tolerances, and finishes as shown or specified in the Contract Documents including, without limitation, the Drawings and Specifications.

D. Contractor shall fit Work airtight to pipes, sleeves, ducts, conduit, and other penetrations through surfaces. Contractor shall conform to all Code requirements for penetrations or the Drawings and Specifications, whichever calls for a higher quality or more thorough requirement. Contractor shall maintain integrity of both rated and non-rated fire walls, ceilings, floors, etc.

E. Contractor shall restore Work which has been cut or removed. Contractor shall install new products to provide completed Work in accordance with

requirements of the Contract Documents and as required to match surrounding areas and surfaces.

F. Contractor shall refinish all continuous surfaces to nearest intersection as necessary to match the existing finish to any new finish.

END OF DOCUMENT

DOCUMENT 01 76 00

ALTERATION PROJECT PROCEDURES

PART 59 – GENERAL

59.01 RELATED DOCUMENTS AND PROVISIONS:

All Contract Documents should be reviewed for applicable provisions related to the provisions in this document, including without limitation:

A. General Conditions, including, without limitation, Integration of Work, Purchase of Materials and Equipment, Uncovering of Work and Non-conforming Work and Correction of Work and Trenches;

B. Special Conditions.

PART 60 - PRODUCTS

60.01 PRODUCTS FOR PATCHING AND EXTENDING WORK:

A. New Materials: As specified in the Contract Documents including, without limitation, in the Specifications, Contractor shall match existing products, conditions, and work for patching and extending work.

B. Type and Quality of Existing Products: Contractor shall determine by inspection, by testing products where necessary, by referring to existing conditions and to the Work as a standard.

PART 61 - EXECUTION

61.01 EXAMINATION:

A. Contractor shall verify that demolition is complete and that areas are ready for installation of new Work.

B. By beginning restoration Work, Contractor acknowledges and accepts the existing conditions.

61.02 PREPARATION:

A. Contractor shall cut, move, or remove items as necessary for access to alterations and renovation Work. Contractor shall replace and restore these at completion.

B. Contractor shall remove unsuitable material not as salvage unless otherwise indicated in the Contract Documents. Unsuitable material may include, without limitation, rotted wood, corroded metals, and deteriorated masonry and concrete. Contractor shall replace materials as specified for finished Work.

C. Contractor shall remove debris and abandoned items from all areas of the Site and from concealed spaces.

D. Contractor shall prepare surface and remove surface finishes to provide for proper installation of new Work and finishes.

E. Contractor shall close openings in exterior surfaces to protect existing work from weather and extremes of temperature and humidity. Contractor shall insulate ductwork and piping to prevent condensation in exposed areas. Contractor shall insulate building cavities for thermal and/or acoustical protection, as detailed.

61.03 INSTALLATION:

A. Contractor shall coordinate Work of all alternations and renovations to expedite completion and to accommodate District occupancy.

B. Designated Areas and Finishes: Contractor shall complete all installations in all respects, including operational, mechanical work and electrical work.

C. Contractor shall remove, cut, and patch Work in a manner to minimize damage and to provide a means of restoring Products and finishes to original or specified condition.

D. Contractor shall refinish visible existing surfaces to remain in renovated rooms and spaces, to specified condition for each material, with a neat and square or straight transition to adjacent finishes.

E. Contractor shall install products as specified in the Contract Documents, including without limitation, the Specifications.

61.04 TRANSITIONS:

A. Where new Work abuts or aligns with existing, Contractor shall perform a smooth and even transition. Patched Work must match existing adjacent work in texture and appearance.

B. When finished surfaces are cut so that a smooth transition with new Work is not possible, Contractor shall terminate existing surface along a straight line at a natural line of division and make a recommendation for resolution to the District and the Architect for review and approval.

61.05 ADJUSTMENTS:

A. Where removal of partitions or walls results in adjacent spaces becoming one, Contractor shall rework floors, walls, and ceilings to a smooth plane without breaks, steps, or bulkheads.

B. Where a change of plane of 1/4 inch or more occurs, Contractor shall submit a recommendation for providing a smooth transition to the District and the Architect for review and approval.

C. Contractor shall trim and seal existing wood doors and shall trim and paint metal doors as necessary to clear new floor finish and refinish trim as required.

D. Contractor shall fit Work at penetrations of surfaces.

61.06 REPAIR OF DAMAGED SURFACES:

A. Contractor shall patch or replace portions of existing surfaces, which are damaged, lifted, discolored, or showing other imperfections, in the area where the Work is performed.

B. Contractor shall repair substrate prior to patching finish.

61.07 CULTIVATED AREAS AND OTHER SURFACE IMPROVEMENTS:

A. Cultivated or planted areas and other surface improvements which are damaged by actions of the Contractor shall be restored by Contractor to their original condition or better, where indicated.

B. Contractor shall protect and replace, if damaged, all existing guard posts, barricades, and fences.

C. Contractor shall give special attention to avoid damaging or killing trees, bushes and/or shrubs on the Premises and/or identified in the Contract Documents, including without limitation, the Drawings.

61.08 FINISHES:

A. Contractor shall finish surfaces as specified in the Contract Documents, including without limitations, the provisions of all Divisions of the Specifications.

B. Contractor shall finish patches to produce uniform finish and texture over entire area. When finish cannot be matched, Contractor shall refinish entire surface to nearest intersections.

61.09 CLEANING:

A. Contractor shall continually clean the Site and the Premises as indicated in the Contract Documents, including without limitation, the provisions in the General Conditions and the Specifications regarding cleaning.

END OF DOCUMENT

DOCUMENT 01 77 00

CONTRACT CLOSEOUT AND FINAL CLEANING

PART 62 - GENERAL

62.01 RELATED DOCUMENTS AND PROVISIONS

All Contract Documents should be reviewed for applicable provisions related to the provisions in this document, including without limitation:

A. General Conditions, including, without limitation, Completion of Work;

B. Special Conditions;

C. Temporary Facilities and Controls.

62.02 CLOSEOUT PROCEDURES

Contractor shall comply with all closeout provisions as indicated in the General Conditions.

62.03 FINAL CLEANING

A. Contractor shall execute final cleaning prior to final inspection.

B. Contractor shall clean interior and exterior glass and all surfaces exposed to view; remove temporary labels, tape, stains, and foreign substances, polish transparent and glossy surfaces, wax and polish new vinyl floor surfaces, vacuum carpeted and soft surfaces.

C. Contractor shall clean equipment and fixtures to a sanitary condition.

D. Contractor shall replace filters of operating equipment.

E. Contractor shall clean debris from roofs, gutters, down spouts, and drainage systems.

F. Contractor shall clean Site, sweep paved areas, and rake clean landscaped surfaces.

G. Contractor shall remove waste and surplus materials, rubbish, and construction facilities from the Site and surrounding areas.

62.04 ADJUSTING

Contractor shall adjust operating products and equipment to ensure smooth and unhindered operation.

62.05 RECORD DOCUMENTS AND SHOP DRAWINGS

A. Contractor shall legibly mark each item to record actual construction, including:

(1) Measured depths of foundation in relation to finish floor datum.

(2) Measured horizontal and vertical locations of underground utilities and appurtenances, referenced to permit surface improvements.

(3) Measured locations of internal utilities and appurtenances concealed in construction, referenced to visible and accessible features of the Work.

(4) Field changes of dimension and detail.

(5) Details not on original Contract Drawings

(6) Changes made by modification(s).

(7) References to related Shop Drawings and modifications.

B. Contractor will provide one set of Record Drawings to District.

C. Contractor shall submit all required documents to District and/or Architect prior to or with its final Application for Payment.

62.06 INSTRUCTION OF DISTRICT PERSONNEL

A. Before final inspection, at agreed upon times, Contractor shall instruct District's designated personnel in operation, adjustment, and maintenance of products, equipment, and systems.

B. For equipment requiring seasonal operation, Contractor shall perform instructions for other seasons within six months or by the change of season.

C. Contractor shall use operation and maintenance manuals as basis for instruction. Contractor shall review contents of manual with personnel in detail to explain all aspects of operation and maintenance.

D. Contractor shall prepare and insert additional data in Operation and Maintenance Manual when the need for such data becomes apparent during instruction.

E. Contractor shall review contents of manual with personnel in detail to explain all aspects of operation and maintenance.

62.07 SPARE PARTS AND MAINTENANCE MATERIALS

A. Contractor shall provide products, spare parts, maintenance, and extra materials in quantities specified in the Specifications and in Manufacturer's recommendations.

B. Contractor shall provide District with all required Operation and Maintenance Data at one time. Partial or piecemeal submissions of Operation and Maintenance Data will not be accepted.

PART 63 – PRODUCTS Not Used.

PART 64 – EXECUTION Not Used.

END OF DOCUMENT

DOCUMENT 01 78 23

OPERATION AND MAINTENANCE DATA

PART 65 – GENERAL

65.01 RELATED DOCUMENTS AND PROVISIONS:

All Contract Documents should be reviewed for applicable provisions related to the provisions in this document, including without limitation:

A. General Conditions, including, without limitation, Completion of the Work;

B. Special Conditions.

65.02 QUALITY ASSURANCE:

Contractor shall prepare instructions and data by personnel experienced in maintenance and operation of described products.

65.03 FORMAT:

A. Contractor shall prepare data in the form of an instructional manual entitled "OPERATIONS AND MAINTENANCE MANUAL & INSTRUCTIONS" ("Manual").

B. Binders: Contractor shall use commercial quality, 8-1/2 by 11 inch, three-side rings, with durable plastic covers; two inch maximum ring size. When multiple binders are used, Contractor shall correlate data into related consistent groupings.

C. Cover: Contractor shall identify each binder with typed or printed title "OPERATION AND MAINTENANCE MANUAL & INSTRUCTIONS"; and shall list title of Project and identify subject matter of contents.

D. Contractor shall arrange content by systems process flow under section numbers and sequence of Table of Contents of the Contract Documents.

E. Contractor shall provide tabbed fly leaf for each separate product and system, with typed description of product and major component parts of equipment.

F. Text: The content shall include Manufacturer's printed data, or typewritten data on 24 pound paper.

G. Drawings: Contractor shall provide with reinforced punched binder tab and shall bind in with text; folding larger drawings to size of text pages.

65.04 CONTENTS, EACH VOLUME:

A. Table of Contents: Contractor shall provide title of Project; names, addresses, and telephone numbers of the Architect, any engineers, subconsultants, Subcontractor(s), and Contractor with name of responsible parties; and schedule of products and systems, indexed to content of the volume.

B. For Each Product or System: Contractor shall list names, addresses, and telephone numbers of Subcontractor(s) and suppliers, including local source of supplies and replacement parts.

C. Product Data: Contractor shall mark each sheet to clearly identify specific products and component parts, and data applicable to installation. Delete inapplicable information.

D. Drawings: Contractor shall supplement product data to illustrate relations of component parts of equipment and systems, to show control and flow diagrams. Contractor shall not use Project Record Documents as maintenance drawings.

E. Text: Contractor shall include any and all information as required to supplement product data. Contractor shall provide logical sequence of instructions for each procedure, incorporating manufacturer's instructions.

F. Warranties and Bonds: Contractor shall bind in one copy of each.

65.05 MANUAL FOR MATERIALS AND FINISHES:

A. Building Products, Applied Materials, and Finishes: Contractor shall include product data, with catalog number, size, composition, and color and texture designations. Contractor shall provide information for re-ordering custom manufactured products.

B. Instructions for Care and Maintenance: Contractor shall include Manufacturer's recommendations for cleaning agents and methods, precautions against detrimental agents and methods, and recommended schedule for cleaning and maintenance.

C. Moisture Protection and Weather Exposed Products: Contractor shall include product data listing applicable reference standards, chemical composition, and details of installation. Contractor shall provide recommendations for inspections, maintenance, and repair.

D. Additional Requirements: Contractor shall include all additional requirements as specified in the Specifications.

E. Contractor shall provide a listing in Table of Contents for design data, with tabbed fly sheet and space for insertion of data.

65.06 MANUAL FOR EQUIPMENT AND SYSTEMS:

A. Each Item of Equipment and Each System: Contractor shall include description of unit or system, and component parts and identify function, normal operating characteristics, and limiting conditions. Contractor shall include performance curves, with engineering data and tests, and complete nomenclature, and commercial number of replaceable parts.

B. Panelboard Circuit Directories: Contractor shall provide electrical service characteristics, controls, and communications.

C. Contractor shall include color coded wiring diagrams as installed.

D. Operating Procedures: Contractor shall include start-up, break-in, and routine normal operating instructions and sequences. Contractor shall include regulation, control, stopping, shut-down, and emergency instructions. Contractor shall include summer, winter, and any special operating instructions.

E. Maintenance Requirements: Contractor shall include routine procedures and guide for trouble-shooting; disassembly, repair, and reassembly instructions; and alignment, adjusting, balancing, and checking instructions.

F. Contractor shall provide servicing and lubrication schedule, and list of lubricants required.

G. Contractor shall include manufacturer's printed operation and maintenance instructions.

H. Contractor shall include sequence of operation by controls manufacturer.

I. Contractor shall provide original manufacturer's parts list, illustrations, assembly drawings, and diagrams required for maintenance.

J. Contractor shall provide control diagrams by controls manufacturer as installed.

K. Contractor shall provide Contractor's coordination drawings, with color coded piping diagrams as installed.

L. Contractor shall provide charts of valve tag numbers, with location and function of each valve, keyed to flow and control diagrams.

M. Contractor shall provide list of original manufacturer's spare parts, current prices, and recommended quantities to be maintained in storage.

N. Additional Requirements: Contractor shall include all additional requirements as specified in Specification(s).

O. Contractor shall provide a listing in Table of Contents for design data, with tabbed fly sheet and space for insertion of data.

65.07 SUBMITTAL:

A. Contractor shall submit to the District for review two (2) copies of preliminary draft or proposed formats and outlines of the contents of the Manual within thirty (30) days of Contractor’s start of Work.

B. For equipment, or component parts of equipment put into service during construction and to be operated by District, Contractor shall submit draft content for that portion of the Manual within ten (10) days after acceptance of that equipment or component.

C. Contractor shall submit two (2) copies of a complete Manual in final form prior to final Application for Payment. Copy will be returned with Architect/Engineer comments. Contractor must revise the content of the Manual as required by District prior to District's approval of Contractor's final Application for Payment.

D. Contractor must submit two (2) copies of revised Manual in final form within ten (10) days after final inspection.

PART 66 – PRODUCTS Not Used.

PART 67 – EXECUTION Not Used.

END OF DOCUMENT

DOCUMENT 01 78 36

WARRANTIES

PART 68 - GENERAL

68.01 RELATED DOCUMENTS AND PROVISIONS

All Contract Documents should be reviewed for applicable provisions related to the provisions in this document, including without limitation:

A. General Conditions, including, without limitation, Warranty/Guarantee Information;

B. Special Conditions.

68.02 FORMAT

A. Binders: Contractor shall use commercial quality, 8-1/2 by 11 inch, three-side rings, with durable plastic covers; two inch maximum ring size.

B. Cover: Contractor shall identify each binder with typed or printed title "WARRANTIES" and shall list title of Project.

C. Table of Contents: Contractor shall provide title of Project; name, address, and telephone number of Contractor and equipment supplier; and name of responsible principal. Contractor shall identify each item with the number and title of the specific Specification, document, provision, or section in which the name of the product or work item is specified.

D. Contractor shall separate each warranty with index tab sheets keyed to the Table of Contents listing, providing full information and using separate typed sheets as necessary. Contractor shall list each applicable and/or responsible Subcontractor(s), supplier(s), and/or manufacturer(s), with name, address, and telephone number of each responsible principal(s).

68.03 PREPARATION:

A. Contractor shall obtain warranties, executed in duplicate by each applicable and/or responsible subcontractor(s), supplier(s), and manufacturer(s), within ten (10) days after completion of the applicable item or work. Except for items put into use with District's permission, Contractor shall leave date of beginning of time of warranty blank until the date of completion is determined.

B. Contractor shall verify that documents are in proper form, contain full information, and are notarized, when required.

C. Contractor shall co-execute submittals when required.

D. Contractor shall retain warranties until time specified for submittal.

68.04 TIME OF SUBMITTALS:

A. For equipment or component parts of equipment put into service during construction with District's permission, Contractor shall submit a draft warranty for that equipment or component within ten (10) days after acceptance of that equipment or component.

B. Contractor shall submit for District approval all warranties and related documents within ten (10) days after date of completion. Contractor must revise the warranties as required by the District prior to District's approval of Contractor's final Application for Payment.

C. For items of work delayed beyond date of completion, Contractor shall provide an updated submittal within ten (10) days after acceptance, listing the date of acceptance as start of warranty period.

PART 69 - PRODUCTS Not Used.

PART 70 – EXECUTION Not Used.

END OF DOCUMENT

DOCUMENT 01 78 39

RECORD DOCUMENTS

PART 71 - GENERAL

71.01 RELATED DOCUMENTS AND PROVISIONS:

All Contract Documents should be reviewed for applicable provisions related to the provisions in this document, including without limitation:

A. General Conditions, including, without limitation, Documents on Work;

B. Special Conditions.

PART 72 - RECORD DRAWINGS

72.01 GENERAL:

A. Contractor shall maintain at each Project Site one set of marked-up plans and shall transfer all changes and information to those marked-up plans, as often as required in the Contract Documents, but in no case less than once each month. Contractor shall submit to the Project Inspector one set of reproducible vellums of the Project Record Drawings ("As-Builts") showing all changes incorporated into the Work since the preceding monthly submittal. The As-Builts shall be available at the Project Site. The Contractor shall submit a thumb drive with as-builts in CAD or Revit file format at the conclusion of the Project following review.

B. Label and date each Record Drawing "RECORD DOCUMENT" in legibly printed letters.

C. All deviations in construction, including but not limited to pipe and conduit locations and deviations caused by without limitation Change Orders, Construction Claim Directives, RFI's, and Addenda, shall be accurately and legibly recorded by Contractor.

D. Locations and changes shall be done by Contractor in a neat and legible manner and, where applicable, indicated by drawing a "cloud" around the changed or additional information.

72.02 RECORD DRAWING INFORMATION:

A. Contractor shall record the following information:

(1) Locations of Work buried under or outside each building, including, without limitation, all utilities, plumbing and electrical lines, and conduits.

(2) Actual numbering of each electrical circuit to match panel schedule.

(3) Locations of significant Work concealed inside each building whose general locations are changed from those shown on the Contract Drawings.

(4) Locations of all items, not necessarily concealed, which vary from the Contract Documents.

(5) Installed location of all cathodic protection anodes.

(6) Deviations from the sizes, locations, and other features of installations shown in the Contract Documents.

(7) Locations of underground work, points of connection with existing utilities, changes in direction, valves, manholes, catch basins, capped stubouts, invert elevations, etc.

(8) Sufficient information to locate Work concealed in each building with reasonable ease and accuracy.

In some instances, this information may be recorded by dimension. In other instances, it may be recorded in relation to the spaces in the building near which it was installed.

B. Contractor shall provide additional drawings as necessary for clarification.

C. Contractor shall provide reproducible record drawings, made from final Shop Drawings marked "No Exceptions Taken" or "Approved as Noted."

D. After review and approval of the marked-up specifications by the Project Inspector, Contractor shall provide electronic copies of the drawings (in PDF format) with one file with all of the sheets and one set of individual sheet files at the conclusion of the Project.

PART 73 - RECORD SPECIFICATIONS

73.01 GENERAL:

A. Contractor shall mark each section legibly to record manufacturer, trade name, catalog number, and supplier of each Product and item of equipment actually installed.

B. After review and approval of the marked-up specifications by the Project Inspector, Contractor shall provide one electronic copy of the specifications (in PDF format) at the conclusion of the Project.

PART 74 - MAINTENANCE OF RECORD DOCUMENTS

74.01 GENERAL

A. Contractor shall store Record Documents apart from documents used for construction as follows:

(1) Provide files and racks for storage of Record Documents.

(2) Maintain Record Documents in a clean, dry, legible condition and in good order.

B. Contractor shall not use Record Documents for construction purposes.

PART 75 – PRODUCTS Not Used.

END OF DOCUMENT

SECTION 01 5713

TEMPORARY EROSION AND SEDIMENT CONTROL

PART 1 GENERAL

1.1 SECTION INCLUDES

A. Prevention of erosion due to construction activities.

B. Prevention of sedimentation of waterways, open drainage ways, and storm and sanitary sewers due to construction activities.

C. Restoration of areas eroded due to insufficient preventive measures.

D. Compensation of District for fines levied by authorities having jurisdiction due to non-compliance by Contractor.

1.2 SUMMARY

A. The District will be filing with the State of California, State Water Resources Control Board a Notice of Intent (N.O.I.) to comply with the terms of the General Permit to Discharge Storm Water Associated with Construction Activity, prior to the beginning of construction on this site.

B. A copy of the SWPPP will be on file at the Architect's office for review by the Contractors during the bidding period. The Contractor will need to implement and monitor the storm water pollution prevention plan prepared for this site. The Contractor will be required to review the storm water pollution prevention plan and to identify possible pollution sources and mitigation measures with all subcontractors at their starting of work on site.

C. The Contractor will be obligated to comply with the requirements of the State's General Permit. Any fines or penalties due to failure to comply with the general permit shall be borne by the Contractor.

D. Prior to construction and after commencement of construction activities, revisions to the SWPPP shall be submitted, by the Contractor, to the Architect for amendment to the general permit by the Civil Engineer.

E. Storm water pollution prevention plan testing and reporting will be performed by the Contractor until such responsibility is reassigned by the District.

1.3 RELATED REQUIREMENTS

A. Section 31 10 00 - Site Clearing: Limits on clearing; disposition of vegetative clearing debris.

B. Section 31 22 00 - Grading: Temporary and permanent grade changes for erosion control.

C. Section 32 11 23 - Aggregate Base Courses: Temporary and permanent roadways.

1.4 REFERENCE STANDARDS

A. California Codes and Regulations; Title 24, California Building Code, Parts 1 & 2.

B. State of California State Water Resources Control Board Regulations.

1.5 SUBMITTALS

A. See Section 01 30 00 - Administrative Requirements, for submittal procedures.

B. Comply with pertinent provisions of the general permit.

C. Certificate: Mill certificate for silt fence fabric attesting that fabric and factory seams comply with specified requirements, signed by legally authorized official of manufacturer; indicate actual minimum average roll values; identify fabric by roll identification numbers.

D. Maintenance Instructions: Provide instructions covering inspection and maintenance for temporary measures that must remain after Substantial Completion.

PART 2 PRODUCTS

2.01 NOT USED - REFER TO SWPP FOR MATERIALS.

PART 3 EXECUTION

3.1 EXAMINATION

A. Examine site and identify existing features that contribute to erosion resistance; maintain such existing features to greatest extent possible.

B. Correct conditions detrimental to timely and proper completion of the work.

C. Do not proceed until unsatisfactory conditions are corrected.

3.2 PREPARATION

A. Schedule work so that soil surfaces are left exposed for the minimum amount of time.

3.3 INSTALLATION

A. Installation of the work shall be as indicated on the Drawings as specified herein and regulatory requirements.

B. Maintain the protection up to the project completion.

3.4 MAINTENANCE

A. During and upon completion of the work comply with the general provisions of the general permit.

B. Inspect preventive measures weekly, within 24 hours after the end of any storm that produces 0.5 inches or more rainfall at the project site, and daily during prolonged rainfall.

C. Repair deficiencies immediately.

D. Silt Fences:

1. Promptly replace fabric that deteriorates unless need for fence has passed.
2. Remove silt deposits that exceed one-third of the height of the fence.
3. Repair fences that are undercut by runoff or otherwise damaged, whether by runoff or other causes.

E. Straw Bale Rows:

1. Promptly replace bales that fall apart or otherwise deteriorate unless need has passed.
2. Remove silt deposits that exceed one-half of the height of the bales.

3. Repair bale rows that are undercut by runoff or otherwise damaged, whether by runoff or other causes.

F. Place sediment in appropriate locations on site; do not remove from site.

3.5 CLEAN UP

A. Remove temporary measures after permanent measures have been installed, unless permitted to remain by Architect.

B. Clean out temporary sediment control structures that are to remain as permanent measures.

C. Where removal of temporary measures would leave exposed soil, shape surface to an acceptable grade and finish to match adjacent ground surfaces.

END OF SECTION

SECTION 01 5723

STORM WATER POLLUTION PREVENTION PLAN

1. PART 1 GENERAL

1.1 SECTION INCLUDES

A. Plan administration, maintenance and updates.

B. Placement of erosion/pollution control devices.

C. Maintenance and monitoring of control devices.

D. Non-storm water management.

E. Related work necessary for plan compliance.

F. Reports and certificates.

1.2 REFERENCES

A. The Owner will prepare and provide to the Contractor a site-specific SWPPP in accordance with State requirements.

B. Stormwater Best Management Practice Handbook (BMP Handbook), Construction Edition, as published by the California Storm Water Quality Association. Available at www.casqa.org.

1.3 QUALITY ASSURANCE

A. Implementation and monitoring of the SWPPP shall be accomplished by a Qualified Storm Water Practitioner (QSP).

B. Perform work in accordance with Storm Water Pollution Prevention Plan.

C. Maintain one copy of document on site.

1.4 REGULATORY REQUIREMENT

A. Prior to the beginning of construction on this site the Owner will file with the State of California, State Water Resources Control Board a Notice of Intent (N.O.I.) that this project will comply with the terms of the State Water Resources Control Board's Order No. 2012-0006 - DWQ and the National Pollutant Discharge Elimination System (NPDES) General Permit No. CAS0000002, General Permit for Storm Water Discharges Associated with Construction and Land Disturbance Activities.

B. Comply with requirements of the State's General Permit with regard to the implementation and maintenance of the SWPPP.

1.5 PRE-INSTALLATION CONFERENCE

A. Convene a conference two weeks prior to commencing work at the site, under provisions of Section 01 31 00.

B. Require attendance of parties directly affecting the work of this Section.

C. Review requirements of the SWPPP.

1.6 PERFORMANCE REQUIREMENTS

A. The Storm Water Pollution Prevention Plan is a minimum requirement. Revisions and modifications to the SWPPP are acceptable only if they maintain levels of protection equal to or greater than originally specified.

B. All modifications to the SWPPP shall be made by a Qualified Storm Water Practitioner (QSP).

C. Read and be thoroughly familiar with all of the requirements of the SWPPP

D. Inspect and monitor all work and storage areas for compliance with the SWPPP prior to any anticipated rain.

E. A Qualified Storm Water Practitioner (QSP) shall develop Rain Event Action Plans (REAPs) during construction.

F. Complete any and all corrective measures as may be directed by the regulatory agency.

G. Penalties: Pay any fees and be liable for any other penalties that may be imposed by the regulatory agency for non-compliance with SWPPP during the course of work.

H. Costs: Pay all costs associated with the implementation of the requirements of the SWPPP in order to maintain compliance with the Permit. This includes installation of all Housekeeping BMPs, General Site and Material Management BMPs, Bi-weekly Inspection requirements, maintenance requirements, monitoring requirements, and all other requirements specified in the SWPPP.

2. PART 2 PRODUCTS

2.1 MATERIALS

A. All temporary and permanent storm water pollution prevention facilities, equipment, and materials as required by or as necessary to comply with the SWPPP as described in the BMP Handbook.

B. Substitutions: Under provisions of Section 01 25 13.

3. PART 3 EXECUTION

3.1 GENERAL IMPLEMENTATION REQUIREMENTS

A. All measures required by the SWPPP shall be implemented concurrent with the commencement of construction. Pollution practices and devices shall be followed or installed as early in the construction schedule as possible with frequent upgrading of devices as construction progresses.

B. Conduct an inspection of all erosion control and pollution prevention devices prior to any anticipated storm event to verify all SWPPP measures are in place and to identify and mitigate any new potential pollution sources brought by the ongoing construction.

C. Conduct monitoring to assess compliance with Numeric Action Levels (NALs) or Numeric Effluent Limitations (NELs) as appropriate to the project.

D. After storm events, conduct an inspection of the project site to verify the performance of the erosion control and pollution prevention devices in reducing pollutant loading of the discharged storm water associated with the construction activity.

E. Eliminate or reduce to the extent feasible the discharge of materials other than storm water to the storm drain system and/or receiving waters as dictated by the State General Permit and SWPPP

3.2 IMPLEMENTATION REQUIREMENTS DURING THE NON-RAINY SEASON

A. The non-rainy season in the State of California is between April 1 and September 30.

B. All requirements of the SWPPP shall apply during the non-rainy season without exception.

3.3 IMPLEMENTATION REQUIREMENTS DURING THE RAINY SEASON

A. The rainy season in the State of California is between October 1 and March 31.

B. All requirements of the SWPPP shall apply during the rainy season without exception.

3.4 REPORTING

A. Prepare all inspection records for each inspection done prior to and just after all storm events as required by the SWPPP with two copies forwarded to the Owner and the Architect.

B. Prepare the overall certification based upon the inspection reports for Owner’s use in the certifying the project site's compliance with the SWPPP and the State's General Permit.

3.5 COMPLETION OF WORK

A. Clean-up shall be performed as each portion of the work progresses. All refuse, excess material, and possible pollutants shall be disposed of in a legal manner off-site and all temporary and permanent SWPPP devices shall be in place and maintained in good condition.

B. At completion of work, inspect installed SWPPP devices, and present the currently implemented SWPPP with all backup records to the Owner.

C. Leave storm water pollution prevention controls in place that are needed for post-construction storm water management. Remove those that are not needed. Post-construction controls will be maintained by the Owner.

D. Provide Site Monitoring Reports, SWPPP revisions, Compliance Certificates, and related documents to the Owner. Post-construction controls mentioned in the Compliance Certificate are considered to be in place at the end of the Construction Contract.

3.6 EROSION CONTROL PLAN

A. Refer to Erosion Control Plan that is included in the Contract Documents as a guide for site erosion and sediment control.

B. Include Erosion Control Plan as a part of the final SWPPP.

END OF SECTION

SECTION 02 4116

DEMOLITION

PART 1 - GENERAL

1.01 SUMMARY

A Provisions of the General and Supplementary Conditions and Division One apply to this section.

Section Includes: Furnishing all labor, materials and equipment necessary for demolition, dismantling, cutting and alterations as indicated, specified, and required for completion of the Contract, as applicable. Includes items such as the following:

Protecting existing work to remain.

Cleaning soiled materials that are to remain.

Disconnecting and capping utilities.

Removing debris and equipment.

Removal of items indicated on Drawings.

Salvageable items to be retained by the Owner as indicated on the Drawings and during the pre-construction job walk.

C Related Sections:

Section 31 2 00: Grading.

Section 31 000: Site Clearing.

Section 32 3113: Chain Link Fences and Gates.

1.02 QUALITY ASSURANCE

A. Comply with the following:

1. Applicable codes, ordinances, regulations of local, municipal, state and federal authorities having jurisdiction.

2. Obtain necessary permits and notices, post where required.

3. Comply with safety requirements of the local fire department.

4. Comply with ANSI A10.6.

5. Comply with Standard Specification for Public Works Construction (Green Book)

6. Comply strictly to Rule 403 Fugitive Dust, South Coast Air Quality Management District.

B. Demolition Firm Qualifications: Engage an experienced, licensed firm having a minimum of (5) years full time satisfactory experience in demolition work of similar scope and complexity to that indicated for this Project.

C. Notify affected utility companies before starting Work and comply with their requirements.

D. Carefully perform demolition work, by skilled workers experienced in building demolition procedures, using appropriate tools and equipment. Perform work, at all times, under the direct supervision of a supervisor approved by the Owner Inspector.

E. Coordinate demolition with other trades to ensure correct sequence, limits, and methods of proposed demolition. Schedule work to create least possible inconvenience to the public and to facility operations.

F. Pre-Demolition: Conduct conference at Project site 7 days prior to scheduled installation.

1. Conference agenda shall include review and discussion of requirements of authorities having jurisdiction, instructions and requirements of serving utilities, sequencing and interface considerations and Project conditions.

2. Conference shall be attended by supervisory and quality control personnel of Contractor and all subcontractors performing this and directly related work. Submit minutes of meeting to Owner’s Representative for Project record purposes.

1.03 DEFINITIONS

A. Remove: Remove and legally dispose of items except those indicated to be reinstalled, salvaged, or to remain the Owner's property.

B. Remove and Salvage: Items indicated to be removed and salvaged remain the Owner's property. Remove, clean, and pack or crate items to protect against damage. Identify contents of containers and deliver to location as directed by Owner's Representative.

C. Remove and Reinstall: Remove items indicated; clean, service, and otherwise prepare them for reuse; store and protect against damage. Reinstall items in locations indicated.

D. Existing to Remain: Protect construction indicated to remain against damage and soiling during demolition. When permitted by the Owner's Representative, items may be removed to a suitable, protected storage location during demolition and then cleaned and reinstalled in their original locations.

E. Replace: Remove and legally dispose of existing item(s) indicated and install new like item(s) that conform to project specifications.

1.04 OWNERSHIP OF MATERIALS

A. Ownership of Materials: Except for items or materials indicated to be reused, salvaged, or otherwise indicated to remain the Owner's property, demolished materials shall become the Contractor's property and shall be removed from the site with further disposition at the Contractor's option.

1.05 PROJECT CONDITIONS

A. Drawings may not indicate in detail all demolition work to be carried out. Carefully examine existing conditions to determine full extent of demolition required. All utilities, whether shown on the drawings or not, to be capped at the property line U.N.O.

B. Repair damage due to demolition activities to existing improvements to remain at no additional cost to the Owner. Repair or replace as directed by the Owner Inspector.

C. Take measures to avoid excessive damage from inadequate or improper means and methods, or improper shoring, bracing or support. Repair or replace any resulting damage at no additional cost to the owner as directed by the Owner Inspector.

D. If conditions are encountered that vary from those indicated, notify the Owner Inspector for instructions prior to proceeding. Owner assumes no responsibility for actual condition of structures to be demolished.

E. Inform Owner immediately upon discovery of asbestos products, radioactive materials, toxic wastes or other hazardous materials. Do not remove hazardous materials without Owner authorization.

F. Adjacent roadways/passageways:

1. Maintain fire department access through all phases of the project.

2. Obstruction of streets, walks or other adjacent facilities will not be allowed.

1.06 DIG ALERT NOTIFICATION

A. Before any excavation in or near the public right-of-way, the Contractor must contact the Underground Service Alert of Southern California (Dig Alert) at **811** for information on buried utilities and pipelines.

B. Delineation of the proposed excavation site is mandatory. Mark the area to be excavated with water soluble or chalk based white paint on paved surfaces or with other suitable markings such as flags or stakes on unpaved areas.

C. Call at least Two (2) full working days prior to digging.

D. If the members (utility companies) have facilities within the work area, they will mark them prior to the start of your excavation and if not, they will let you know there is no conflict. A different color is used for each utility type (electricity is marked in red, gas in yellow, water in blue, sewer in green, telephone and cable TV in orange).

E. The Law requires you to hand expose to the point of no conflict 24" (inches) on either side of the underground facility, so you know its exact location before using power equipment.

F. If caught digging without a Dig Alert ticket you can be fined as much as $50,000 per California government code 4216.

PART 2 - PRODUCTS

2.01 SOIL MATERIALS

A. Refer to section 02310 Grading for approved soils on this project.

2.02 HANDLING OF MATERIALS

A. Items scheduled for salvage by the Owner shall be delivered to a location designated by the Owner's Authorized Representative. Items shall be cleaned, packaged and labeled for storage.

B. Items scheduled for reuse shall be stored on site and protected from damage, soiling and theft.

PART 3 - EXECUTION

3.01 GENERAL

A. Protection:

1. Do not begin demolition until safety partitions, barricades, warning signs and other forms of protection are installed.

2. Provide safeguards, including warning signs, lights and barricades, for protection of occupants and the general public during demolition.

3. Provide and maintain fire extinguishers. Comply with requirements of governing authorities.

4. Maintain existing utilities which are to remain in service and protect from damage during operations.

B. Safety: If at any time safety of existing construction appears to be endangered, take immediate measures to correct such conditions; cease operations and immediately notify the Owner Inspector. Do not resume demolition until directed by the Owner Inspector.

C. Noise and Dust Abatement: Exercise all reasonable and necessary means to abate dust, dirt rising and undue noise. Perform necessary sprinkling and wetting of construction site to allay dust as required by applicable codes and ordinances

D. Dust Control: Use water mist, temporary enclosures, and other suitable methods to limit the spread of dust and dirt. Comply with governing environmental protection regulations. Do not create hazardous or objectionable conditions, such as flooding and pollution, when using water.

E. Water for Dust Control: Contractor shall obtain and pay for all water required for his dust control operations. This may include, but is not limited to, payment of deposits to utility for construction meter, and payment of all monthly service and water charges. Construction meter shall be in place throughout construction period unless alternative arrangements are made with the Water Department to provide construction water for all purposes. Contractor shall be aware of water moratoriums and restrictions, and shall immediately advise Owner of effects on construction schedules.

F. A 6 foot high, chain link fence and gates, shall be erected prior to any demolition operations at the construction limits perimeter. Coordinate the exact location with Owner. Comply with specification section 02821: Chain Link Fences and Gates.

G. Deliver salvaged material to a location designated by the District. Contractor shall be responsible for all such materials, fittings, fixtures, etc., and shall use the utmost care in their removal, so as to insure the least possible damage to the same or surrounding work.

H. Debris Removal: Remove and transport debris in a manner that will prevent spillage on adjacent surfaces and areas. Remove debris from elevated portions of building by chute, hoist, or other device that will convey debris to grade level.

I. Progress Cleaning: Clean adjacent buildings and improvements of dust, dirt, and debris caused by demolition operations. Return adjacent areas to condition existing before start of demolition.

J. Survey the condition of the building to determine whether removing any element might result in structural deficiency or unplanned collapse of any portion of the structure or adjacent structures during selective demolition.

K. Where performing contracted scope of work requires coring of existing concrete, brick masonry, or CMU structures (including Walls, Floors, and Sitework), contractor shall obtain and document means of verifying existence and location of embedded steel reinforcing materials within said concrete, brick and CMU assemblies. Contractor shall locate reinforcement by means of non-invasive technology such as X-ray photography for the purposes of protecting said reinforcement in place and shall not damage any reinforcement materials (rebar, etc.) unless specifically detailed as such and approved by the authority having jurisidiction.

L. Perform surveys as the Work progresses to detect hazards resulting from selective demolition activities.

M. Drain, purge, or otherwise remove, collect, and dispose of chemicals, gases, explosives, acids, flammables, or other dangerous materials before proceeding with selective demolition operations.

N. Contractor shall provide temporary weather protection, during interval between demolition and removal of existing construction, on exterior surfaces and new construction to ensure that no water leakage or damage occurs to structure or interior areas.

O. Protect walls, ceilings, floors, and other existing finish work that are to remain and are exposed during selective demolition operations.

P. Cover and protect furniture, furnishings, and equipment that have not been removed.

Q. Provide and maintain interior and exterior shoring, bracing, or structural support to preserve stability and prevent movement, settlement, or collapse of building to be selectively demolished.

R. Clean adjacent structures and improvements of dust, dirt, and debris caused by selective demolition operations. Return adjacent areas to condition existing before start of selective demolition.

S. Where repairs to existing surfaces are required, patch to produce surfaces suitable for new materials if exposed, repaired surfaces shall match existing adjacent surface color finish and texture.

1. Restore exposed finishes of patched areas and extend finish restoration into adjoining construction to remain in a manner that eliminates evidence of patching and refinishing.

T. Patch and repair floor and wall surfaces in the new space where demolished walls or partitions extend one finished area into another. Provide a flush and even surface of uniform color and appearance.

U. Patch, repair, or rehang existing ceilings as necessary to provide an even-plane surface of uniform appearance.

V. Disposal: Promptly dispose of demolished materials. Do not allow demolished materials to accumulate on-site.

3.02 PREPARATION

A. Prevent movement or settlement of adjacent structures. Provide bracing and shoring as necessary.

B. Utilities:

1. The Drawings do not purport to show all below-grade conditions and objects on the site. Contractor shall perform field investigations as necessary to establish location of underground utility services and other features affecting earthwork.

2. Mark location of underground utilities on asphalt pavement with paint

3. Disconnect and cap utility services; comply with requirement of governing authorities.

4. Contractor shall arrange and notify utility company in advance of date and time when service needs to be disconnected.

5. Do not commence demolition operations until associated disconnections have been completed.

6. Should utilities and other below-grade conditions be encountered which adversely affect the Work, discontinue affected Work and notify Owner's Representative and Architect and request direction. Unforeseen conditions will be resolved in accordance with provisions of the General Conditions of the Contract.

7. Should a utility line or structure be damaged, immediately notify the responsible utility company or agency and notify Owner's Representative and Architect.

a. Repair or replace all damaged utility lines and structures as directed by the responsible utility company or agency.

b. Repair or replacement of damaged utility lines and structures whole location or existence has been made known to the Contractor shall be at no change in the Contract Time and Contract Price.

C. Structures to be demolished shall be inspected for hazardous materials. Such materials shall be removed and disposed of before general demolition begins.

D. Do not interrupt existing utilities serving occupied or operating facilities, except when authorized in writing by Owner's Representative and Authority Having Jurisdiction (AHJ). Provide temporary services during interruptions to existing utilities, as acceptable to Owner's Representative and to Authority Having Jurisdiction (AHJ).

3.03 EXPLOSIVES

A. Explosives: Use of explosives will not be permitted.

3.04 DEMOLITION

A. Demolition, General:

1. With certain exceptions, the Contractor shall raze, remove and dispose of all buildings and foundations, structures, paving, fences and other obstructions that lie wholly or partially within the construction limits identified on Drawings. The exceptions are utility-owned equipment and any other items the Owner/Documents may direct the Contractor to leave intact or re-use onsite. Cease demolition immediately if adjacent structures appear to be in danger.

2. Conduct demolition operations and remove debris to ensure minimum interference with roads, streets, walks, and other adjacent occupied and used facilities.

3. Do not close or obstruct streets, walks, or other adjacent occupied or used facilities without permission from Owner's Representative and Authority Having Jurisdiction (AHJ). Provide alternate routes around closed or obstructed traffic ways if required by governing regulations.

4. Conduct demolition operations to prevent injury to people and damage to adjacent buildings and facilities to remain. Ensure safe passage of people around demolition area.

a. Erect temporary protection, such as walks, fences, railings, canopies, and covered passageways, where required by authorities having jurisdiction.

b. Protect existing site improvements, appurtenances, and landscaping to remain.

c. Erect a plainly visible fence around drip line of individual trees or around perimeter drip line of groups of trees to remain.

5. Structural Stability: Provide and maintain interior and exterior shoring, bracing, or structural support to preserve stability and prevent movement, settlement, or collapse of buildings or portions thereof to be demolished and adjacent buildings to remain. Strengthen or add new supports when required during progress of demolition.

6. Below-Grade Construction: Demolish foundation walls and other below-grade construction, as follows:

a. Remove below-grade construction, including foundation walls and footings, to at least 18-inches below grade, but at least to bottom of footing or foundation wall.

b. Completely remove below-grade construction, including foundation walls and footings.

7. Filling Below-Grade Areas: Completely fill below-grade areas and voids resulting from demolition of buildings and pavements with soil materials according to requirements specified in Section 02310- Grading.

8. Damages: Promptly repair damages to adjacent facilities caused by demolition operations.

9. Unless otherwise indicated on the plans, remove all demolished material from the site and dispose of at approved disposal sites. Comply with all requirements for recycling of demolished material as called for in Division 1 of this Specification. The contractor shall obtain necessary permits for the transportation of material from the site.

3.05 REMOVAL OF EXISTING PLUMBING AND ELECTRICAL EQUIPMENT AND SERVICES

A. Remove existing plumbing and electrical equipment fixtures and services not indicated for reuse and not necessary for completion of work. Remove abandoned lines and cap unused portions of existing lines. The Contractor is responsible for completely surveying the site and locating all existing utilities, above and below ground, before contracting to perform the work.

B. Asbestos – Cement (A-C) Pipe Removal and Disposal: The plans for the project may indicate that existing asbestos-cement pipe is to be removed from the ground. Where so indicated the Contractor shall excavate with care, expose the pipeline and remove the A-C pipe to the nearest joint. Should the plans not call out the removal of the A-C pipe and A-C pipe is encountered, the Contractor shall obtain approval from the Owner as to whether or not the A-C pipe is to be removed or can be left in place. Cutting of the pipe shall only be done if absolutely there is no other way to expose the length of pipe to the nearest joint that be separated and the Owner approves the cutting of the pipe. Cutting of the pipe shall be done with a mechanical saw with a pressure water source to dampen the pipe and the dust from the cutting. To remove a coupling, the coupling may have to be broken in the trench. The pipe once removed from the trench may be broken for handling. The breaking shall be done within a plastic bagging or sheeting material to minimize the release of asbestos fibers into the atmosphere. Once removed and broken, if necessary, the A-C material shall be bagged and disposed of legally with the Owner to be given a copy of all Contractor paperwork as to the legal disposal of the material. If the A-C pipe section(s) are removed intact the pipe can be removed by the Contractor from the project site and become the property and responsibility of the Contractor.

3.06 CLEANING

A. Clean existing materials to remain, using appropriate tools and materials.

B. Protect adjacent materials and equipment during cleaning operations.

3.07 PATCHING AND RESTORATION

A. Patching: Where removals leave holes and damaged surfaces that will be exposed in the completed construction, such holes and damaged surfaces shall be patched and restored to match adjacent finished surfaces.

1. Where new finish construction is applied over existing holes and damaged surfaces, patching and restoration shall be performed to the extent to make the substrate suitable for the provision of new finish construction.

2. Surfaces of patched and restored areas shall be flush with the adjacent existing surfaces and shall closely match existing adjacent surfaces in texture and finish.

B. Restoration of Site Finishes:

1. Concrete paving: Where it is necessary to excavate a trench across make a cut in concrete paved areas, cut concrete cutting saw, full depth of paving.

2. Bituminous paving: Where it is necessary to excavate a trench across make a cut in bituminous paved areas, either first score paving with a concrete cutting saw, in neat straight lines, prior to removing paving or make straight cuts with pneumatic spade.

3. Restoration of paving: Restore all paved areas to their original condition using material of like type and quality as the removed paving. Paving in public ways shall conform to applicable requirements of authorities having jurisdiction. Repaired surfaces shall match existing adjacent paving except minimum depth shall be 3-1/2 inches where existing paving is less than 3-1/2 inches.

4. Restoration of landscape planting: Restore soil and plant materials to match original condition, including additional topsoil, topsoil grading and preparation, new plant materials and plant maintenance during establishment period.

3.08 MAINTENANCE

A. Install and maintain all erosion control devices, including sandbag and gravel bag dikes, silt fences, de-silting basins, inlet barricades, vehicle wash traps, and other features called for in the Storm Water Pollution Prevention Plan and Temporary Erosion Control Plans.

3.09 CLEAN-UP/DISPOSAL

A. Coordinate building access with the Owner Inspector. Review and schedule waste storage and removal, include truck access to site.

B. Debris shall be dampened by fog water spray prior to transporting by truck.

C. Debris pick-up area shall be kept broom-clean and shall be washed daily with clean water.

D. Remove waste and debris, other than items to be salvaged. Turn over salvaged items to Owner, or store and protect for reuse where scheduled. Continuously clean-up and remove items as demolition work progresses. Do not allow waste and debris to accumulate in building or on site.

END OF SECTION

SECTION

SITE CLEARING

PART 1 - GENERAL

1.1 SUMMARY

A. Contractor shall furnish all labor, materials, services, testing, transportation and equipment necessary for the completion of all site clearing work as required and as indicated on drawings and specified herein. Work materials and equipment not indicated or specified which is necessary for the complete and proper operation of the work of this Section in accordance with the true intent and meaning of the contract documents shall be provided and incorporated at no additional cost to the Owner.

B. Removal of surface debris; removal of paving and curbs; removal of trees, shrubs, and other plant life; topsoil excavation; and repair of damaged vegetation and/or irrigation systems/system components.

C. Removal of concrete and bituminous surfacing.

1.2 RELATED SECTIONS

A Section 01 71 : Field Engineering.

Section 01 : Storm Water Pollution P P

C T E C

Section : Grading.

1.3 REFERENCE STANDARDS

A. The work provided herein shall conform to and be in accordance with the Contract Plans, General Conditions/Specifications and Special Provisions, as well as the Standard Specifications for Public Works Construction ("GREENBOOK"), Latest Edition, adopted by the Southern California Chapter, American Public Works Association; herein referred to as the "Standard Specifications".

1.4 REGULATORY REQUIREMENTS

A. The Contractor shall obtain all necessary permits, licenses, or agreements required by any legally constituted agency, pay for all fees and give all necessary notices required for the construction of the work. The School District shall reimburse the contractor for all necessary permits or inspection fees by any legally constituted agency.

B. Perform all work of this Section in strict accordance with applicable Government Codes and Regulations especially meeting all safety standards and requirements of CAL/OSHA, the County and City in which the work is taking place. Provide additional measures, added materials and devices as may be needed as directed by the District Representative at no added cost to the District.

C. Comply strictly to Rule 403 Fugitive Dust, South Coast Air Quality Management District.

D. Coordinate clearing Work with utility companies.

1.5 PROJECT CONDITIONS

A. Traffic: Minimize interference with adjoining roads, streets, walks, and other adjacent occupied or used facilities during site-clearing operations.

1. Do not close or obstruct streets, walks, or other adjacent occupied or used facilities without permission from Owner and authorities having jurisdiction.

2. Provide alternate routes around closed or obstructed traffic ways if required by Owner or authorities having jurisdiction.

B. Salvable Improvements: Carefully remove items indicated to be salvaged and store on Owner's premises where indicated.

C. Do not commence site clearing operations until temporary erosion and sedimentation control measures are in place.

D. Do not direct vehicle or equipment exhaust towards protection zones.

E. Prohibit heat sources, flames, ignition sources, and smoking within or near protection zones.

F. Soil Stripping, Handling, and Stockpiling: Perform only when the topsoil is dry or slightly moist.

PART 2 - PRODUCTS

2.1 Satisfactory Soil Materials: Requirements for satisfactory soil materials are specified in Section – Grading, part 2.01D.

PART 3 - EXECUTION

3.1 PREPARATION

A. Verify that existing plant life designated to remain is tagged or identified.

B. Protect and maintain benchmarks and survey control points from disturbance during construction.

C. Identify a waste area for placing removed materials.

3.2 TEMPORARY EROSION AND SEDIMENTATION CONTROL

A. Provide temporary erosion- and sedimentation-control measures to prevent soil erosion and discharge of soil-bearing water runoff or airborne dust to adjacent properties and walkways, according to erosion- and sedimentation-control Drawings and requirements of authorities having jurisdiction.

B. Retain first paragraph below if tree- or plant-protection zones are required.

C. Verify that flows of water redirected from construction areas or generated by construction activity do not enter or cross protection zones.

D. Inspect, maintain, and repair erosion- and sedimentation-control measures during construction until permanent vegetation has been established.

E. Remove erosion and sedimentation controls and restore and stabilize areas disturbed during removal.

3.3 PROTECTION

A. Protect existing structures and site improvements indicated to remain from damage by approved methods and/or as authorized by the District Representative. Removal of all protections shall be when work of this Section is completed or when so authorized by the District Representative.

B. Protect Existing Utilities indicated or made known to remain traversing the job-site and serving existing adjacent facilities.

C. Protect Existing Trees and Shrubs indicated to remain by providing temporary surrounding fencing so located a sufficient distance away so that trees and shrubs will not be damaged by site-clearing operations.

1. Protection Barrier: A protection barrier shall be installed around the shrubs or trees to be preserved. The barrier shall be constructed of a durable fencing material, such as plastic construction fencing, snow fence, or chain link. The barrier shall be placed at or beyond the drip line. "Drip line" as referred to herein means a line which may be drawn on the ground around the tree directly under its outermost branch tips and which identifies that location where rainwater tends to drip from the tree. Placement of barrier to be approved by District Representative (Grounds Supervisor). If barrier is placed inside the drip line, then 3/4 inch plywood must be placed over the root zone up to the drip line. The fencing shall be maintained in good repair throughout the duration of the project, and shall not be removed, relocated, or encroached upon without permission of the District Representative (Grounds Supervisor).

2. Storage of Materials: There shall be NO storage of materials or supplies of any kind within the area of the protection barriers. Concrete, cement, asphalt materials, block, stone, sand and soil shall not be placed within the drip line of the tree(s).

3. Fuel Storage: Fuel storage shall NOT be permitted within 150 feet of any tree to be preserved. Refueling, servicing and maintenance of equipment and machinery shall NOT be permitted within 150 feet of protected trees.

4. Vehicles/equipment: NO parking or driving of vehicles or storage of equipment shall be permitted within the drip line of any tree to be preserved.

5. Debris and Waste Materials: Debris and waste from construction or other activities shall NOT be permitted within protected areas. Wash down of Concrete, cement or asphalt handling equipment, in particular shall NOT be permitted within 150 feet of protected areas.

6. Grade Changes: Grade changes can be particularly damaging to trees. Any grade changes should be approved by the District Representative (Grounds Supervisor) before construction begins and precautions taken to mitigate potential injuries.

7. Damages: Any damages or injuries to the preserved trees (including pruning or cutting of such trees not in conformity with the International Society of Arboricultural Pruning Guidelines and ANSI A300 Pruning Standards) shall be reported immediately to the District Representative (Grounds Supervisor). Severed roots shall be pruned cleanly to healthy tissue, using proper pruning tools. Broken branches/limbs shall be pruned according to International Society of Arboricultural Pruning Guidelines and ANSI A300 Pruning Standards. In the event that any damage, injury, improper pruning or cutting of a protected tree is deemed to be so substantial as to require its replacement (such determination to be made in the sole discretion of the District Representative), Contractor shall replace such tree with the same species and variety of tree, up to a box size of 48

inches, or if no such replacement is available, with a substitute species or variety as determined in the sole discretion of the District Representative. Any replacement tree shall be approved in advance by the District Representative. The value of the tree to be replaced shall be determined by a Certified Arborist selected by Contractor from the District's approved list of Registered Consulting Arborists. To the extent that the value of the replaced tree as determined by the Certified Arborist exceeds the cost of the replacement tree, Contractor shall be liable to District for such difference in value in addition to all costs associated with replacement of the damaged tree.

8. Removal of Existing Tree or Shrub: Prior to removing or cutting any trees designated for removal, the contractor shall coordinate with the District's Ground Supervisor. In the event that Contractor, a Subcontractor, Sub-Subcontractor, material supplier or anyone else performing the Work of the Contract willfully, negligently or mistakenly removes any tree or shrub not designated for removal, Contractor shall immediately report such removal to the District Representative (Grounds Supervisor). Contractor shall replace such tree with the same species and variety of tree, up to a box size of 48 inches, or if no such replacement is available, with a substitute species or variety as determined in the sole discretion of the District Representative. Any replacement tree shall be approved in advance by the District Representative. The value of the tree to be replaced shall be determined by a Certified Arborist selected by Contractor from the District's approved list of Registered Consulting Arborists. To the extent that the value of the replaced tree as determined by the Certified Arborist exceeds the cost of the replacement tree, Contractor shall be liable to District for such difference in value in addition to all costs associated with replacement of the damaged tree.

9. Unauthorized Tree Removal or Injury: Criminal Penalties: Reference is made to California Penal Code §384a which provides that any person who willfully or negligently cuts, destroys, mutilates or removes any tree or shrub or portion thereof growing on public land without a written permit from the owner of said public land is guilty of a misdemeanor, subject to a fine of up to $1,000, imprisonment in county jail for up to 6 months, or both. Contractor is advised that, in addition to all remedies provided herein and in the Contract Documents, the District shall cooperate with appropriate authorities in prosecuting and enforcing Penal Code §384a and other criminal sanctions as appropriate concerning trees and shrubs located on District property.

10. Preventive Measures: Before construction begins fertilization of the affected areas to be applied at a rate to be determined by the District Representative (Grounds Supervisor).

D. Protect bench marks, survey control points, and existing structures from damage or displacement.

E. Protection of Persons and Property (existing structures and site improvements):

1. Provide barricades, warning signs at open depressions and holes on adjacent property and public accesses.

2. Provide operating warning lights during hours from dusk to dawn each day or as otherwise required.

3. Protect existing remaining structures, utilities, sidewalks, pavements other facilities from damage as caused by settlement, undermining, washout or other hazards created by site-clearing operations of this Section.

F. Use means necessary to prevent dust from becoming a nuisance to the public, to neighbors and to others performing work on or near the job-site.

G. Maintain access to the job-site at all times.

3.4 CLEARING AND GRUBBING

A. Clear areas required for access to site and execution of Work.

B. Remove all rubbish and debris existing and resulting from work operations of this Section as soon as possible, do not allow to pile up. Do not burn rubbish and debris on the job-site.

C. Where active utility lines need to be capped or plugged, perform such work in accordance with requirements of the Utility Company.

3.5 REMOVAL

A. Remove debris, rock, and extracted plant life from site.

B. Excavate and remove associated plumbing piping.

C. Prior to demolition work, the Contractor shall notify the District Representative to identify the existing items for salvage purposes. The materials identified for salvage shall be returned to the District in a timely manner agreed upon by the District Representative.

3.6 CONCRETE AND BITUMINOUS SURFACE REMOVAL

A. Where noted on the construction drawings, break up and completely remove all existing concrete surfacing, curbs, gutters, walks and bituminous surfacing to limits indicated to be removed. All cutting shall be done to a neat and even line with proper tools or a concrete cutting saw. Minimum depth of cut shall be 1-1/2", unless otherwise specified. Remove any concrete broken beyond the indicated limits to the nearest joint or score line and replace with new concrete to match the existing.

B. Removed concrete and bituminous materials shall be disposed of off-site unless otherwise noted on the construction drawings. All such items to be removed shall be disposed of off the property in a legal manner.

C. Bituminous pavement saw cutting shall conform to the provisions of Section 300-1.3.2 (a) of the Standard Specifications. The residue resulting from the saw cutting operations shall not be permitted to flow beyond the specific work location and shall be removed the same day.

D. Removal of concrete curb / curb & gutter covered by this section shall include saw-cutting and removal of a twelve (12") inch wide section of the adjacent bituminous pavement.

E. When saw cutting concrete curb / curb & gutter, the cuttings shall be continuously wet vacuumed to prevent the materials from entering catch basins, storm water conveyances, or waters of the State. Vacuumed cuttings shall be disposed of according to applicable regulations.

F. Concrete curb and concrete curb and gutter shall be removed to the lines, grades and locations shown on the plans in accordance with Section 300-1.3.2 of the Standard Specifications.

G. Concrete removal in sidewalk and driveway areas shall extend to existing score lines unless specifically indicated otherwise on the Plans or in the Project Special Provisions, or unless otherwise approved by the Engineer.

H. Reinforcing or other steel may be encountered in portions of concrete to be removed. No additional compensation will be allowed for the removal of concrete containing reinforcing or other steel.

I. In those areas where existing bituminous surfacing is removed to make way for new planting or lawn areas, remove soil 6” below existing exposed soil surface. Removed soil may be used only as fill under buildings or other areas to be paved, only if approved by the District Inspector. Legally dispose of off site, if material is not approved as fill material.

3.7 REPAIRS

A. During demolition and construction, ensure that trees, shrubs and other plant material and vegetation are protected inside and outside of the work zone and that the vegetation is being watered, maintaining the proper moisture content according to the season. Failed vegetation, including sod, due to lack of water, and/or plant material destroyed during construction period are to be replaced to equal or better size and condition at no additional cost to the District.

B. If the irrigation system is damaged or modified during construction, it shall be repaired to the Districts standards, and shall be in equal or better condition than prior to damage or modification. All repairs shall be, inspected and approved by the District Representative (Grounds Supervisor) prior to backfilling or covering of said repairs. The District representative requires forty-eight hours prior notice, when contractor requests inspection of completed repairs. All repairs shall be made so as to ensure proper operation prior to the close of the contract at no additional cost to the District.

C. Controller Wires: If damaged, cut or removed, repair by splicing, soldering and silicone sealing. To ensure proper operation, reconnect the wires to the valve to correspond with the map on the controller to the correct station.

D. Hydraulic Tubes: If damaged/cut or removed, repair by replacing the tubing using equal or better material.

E. Valves: If damaged, repair/replace with equal or better material. All valves are to be flushed/cleaned thoroughly.

F. Mainlines: If damaged, repair/replace with equal or better material. All lines are to be flushed/cleaned thoroughly.

G. Lateral Lines: If damaged, repair/replace with equal or better material. All lines are to be flushed/cleaned thoroughly.

H. Irrigation Heads: If damaged, repair/replace with equal or better material. All heads are to be flushed and filters cleaned thoroughly.

I. Controllers: If damaged repair/replace with equal or better material.

J. Backflow Prevention Devices: If damaged, repair/replace with equal or better material.

K. Gate/Ball/Quick Coupler Valves: If damaged repair/replace with equal or better material.

L. Valve Boxes: If damaged, repair/replace with equal or better material. Concrete boxes and concrete lids with the appropriate markings for identification shall be used. The top of the box shall be buried below finish grade, equal to existing depth or deeper. The top of the valve stems shall be 6" below the underside of the top of the box.

M. Construction in grass areas: Sod shall be removed by sod cutting at a soil depth of 2", stored on site, and watered on a daily basis. Upon completion of work, stored sod shall be reinstalled over the areas disrupted due to construction. An option may be to bypass cutting the sod, however at the completion of the project, finish grading and installation of new Hybrid Bermuda GN -1 sod over the areas disrupted by construction shall be required.

3.8 EXCESS MATERIALS DISPOSAL

A. Remove surplus soil material, unsuitable topsoil, obstructions, demolished materials, and waste materials, including trash and debris, and legally dispose of them off Owner's property.

B. Separate recyclable materials produced during site clearing from other non-recyclable materials. Store or stockpile without intermixing with other materials and transport them to recycling facilities. Do not interfere with other Project work.

3.9 SITE CLEANUP

A. Cleanup of branches, limbs, logs, or any other debris resulting from any operations shall be promptly and properly accomplished. The work area shall be kept safe at all times until all operations are completed. Under no circumstances shall the accumulation of brush, limbs, logs, or other debris be allowed in such a manner as to result in a hazard to the public. All debris shall be cleaned up each day before the work clew leaves the site, unless permission is given by the Owner to do otherwise. All lawn areas shall be raked, all streets and sidewalks shall be swept, and all brush, branches, rocks or other debris shall be removed from the site. Areas are to be left in a condition equal to or better than that which existed prior to the commencement of operations.

END OF SECTION

SECTION 31 2200

GRADING

PART 1 - GENERAL

1.01 SUMMARY

A The work of this section shall include excavation, unclassified cut, unclassified fill, removing existing unsatisfactory material, preparing areas to be filled, spreading and compacting of fill in the areas to be filled, and all other work necessary to complete the grading of the site. It shall be the Contractor's responsibility to place, spread, moisten or dry, and compact the fill in strict accordance with these specifications to the lines and grades indicated on project plans or as directed in writing by the Geotechnical Engineer. Included with this Work are the following:

General exterior grading, cutting and filling, including grading for building area, paving, planting areas, banks and hillsides.

Excavating, filling, backfilling, and compacting for Project site pavement, planting areas, buildings, and other structures.

Base course for walks and pavements.

Excavating and backfilling trenches within buildings lines.

Excavating and backfilling for underground mechanical and electrical utilities and appurtenances.

Shoring plan guidelines.

Related Sections: The following Sections contain requirements that relate to this Section.

Section 01 712 : Field Engineering.

Section : Bituminous Surfacing.

Section : C P

Owner provided Geotechnical Report.

1.02 DEFINITIONS

A. Excavation consists of the removal of material encountered to subgrade elevations and the reuse or disposal of materials removed.

B. Subgrade: The uppermost surface of an excavation or the top surface of a fill or backfill immediately below subbase, drainage fill, or topsoil materials.

C. Borrow: Soil material obtained off site when sufficient approved soil material is not available from excavations.

D. Base Course: The layer placed between the subgrade and surface pavement in a paving system.

E. Drainage Fill: Course of washed granular material supporting slab on grade placed to cut off upward capillary flow of pore water.

F. Permeable Backfill: Provide permeable backfill material behind retaining structures consisting of gravel, crushed gravel, crushed rock, natural sands, manufactured sand, or combinations.

G. Unauthorized excavation consists of removing materials beyond indicated subgrade elevations or dimensions without direction by the Architect. Unauthorized excavation, as well as remedial work directed by the Architect, shall be at the Contractor's expense.

H. Structures: Buildings, footings, foundations, retaining walls, slabs, tanks, curbs, mechanical and electrical appurtenances, or other man made stationary features constructed above or below ground surface.

I. Utilities include underground pipes, conduits, ducts, and cables, as well as underground services within building lines.

1.03 SUBMITTALS TO CONSTRUCTION MANAGER

A. General: Submit the following according to the Conditions of the Contract and Division 1 Specification Sections.

B. Product data for the following:

1. Each type of plastic warning tape.

2. Filter fabric.

C. Samples of the following:

1. 12 by 12 inch sample of filter fabric.

D. Test Reports: In addition to test reports required under field quality control, submit the following:

1. One optimum moisture-maximum density curve for each soil sample.

E. Excavation support & protection (shoring) shop drawings for informational purposes: Prepared by or under the supervision of a qualified professional engineer for excavation support and protection systems.

1.04 QUALITY ASSURANCE

A. Codes and Standards:

1. 2013 California Building Code, Title 24, Part 2, Volume 2 of 2, Appendix J, Grading.

2. ASTM D422 - Method for Particle Size Analysis of Soils

3. ASTM D1556 - Test Method for Density of Soil in Place by the Sand-Cone Method.

4. ASTM D1557 - Test Methods for Moisture-Density Relations of Soils and Soil-Aggregate Mixtures Using 10-lb (4.54 kg) and 18-inch (457-mm) Drop.

5. ASTM D2216 - Method for Laboratory Determination of Water (Moisture) Content of Soil, Rock, and Soil Aggregate Mixtures.

6. ASTM D2922 - Test Method for Density of Soil and Soil-Aggregate in Place by Nuclear Methods (Shallow Depths).

7. ASTM D3017 - Test Method for Moisture Content of Soil and Soil-Aggregate in Place by Nuclear Methods (Shallow Depths).

8. ASTM D4318 - Test Method for Liquid Limit, Plastic Limit and Plasticity Index of Soils.

9. AASHTO T217 - Determination of Moisture in Soils by Means of a Calcium Carbide Gas Pressure Meter.

10. ASTM D4829 - Expansion Index Test.

B. For off-site work, conform to all requirements of City of Downey and any other agencies having jurisdiction. Coordinate and obtain all required permits and inspections.

C. The work provided herein shall conform to and be in accordance with the Contract Plans, General Conditions/Specifications and Special Provisions, as well as the Standard Specifications for Public Works Construction ("GREENBOOK"), Latest Edition, adopted by the Southern California Chapter, American Public Works Association; herein referred to as the "Standard Specifications".

D. Comply with all requirements of permit for export of soil from site. Permit is to be obtained and paid for by Contractor. Furnish copies of all permits and licenses required by the City to Owner's representative.

E. Professional Observation: A soils engineer will be retained by the Owner for purposes of inspection, testing and approval of all work under this section. Perform work of this Section under inspection and approval of the soils engineer. Give soils engineer not less than 48 hours advance notice of readiness for inspection.

F. The soils engineer will have the authority over all filling, grading, and compaction operations, including interruption of work if deemed necessary due to improper work

G. Pre-Grading Conference: Conduct conference at Project site to comply with requirements of Division 1 Section "Project Meetings."

1. Before commencing earthwork operations, meet with representatives of the governing authorities, Owner, Architect, consultants, Geotechnical Engineer, independent testing agency, and other concerned entities. Review earthwork procedures and responsibilities including testing and inspection procedures and requirements. Notify participants at least 3 working days prior to convening conference. Record discussions and agreements and furnish a copy to each participant.

1.05 CONSTRUCTION MONITORING

A. All earthwork and foundation construction should be monitored by a qualified engineer/technician under the supervision of a Geotechnical Engineer, including;

1. Observation of all site preparations;

2. Observation of shoring installation, if needed:

3. Observation of all site excavations;

4. Test and approval of all import soil;

5. Observation of placement of all compacted fills and backfills;

6. Observation of all surface and subsurface drainage systems;

7. Observation of all foundation and pile excavations;

8. Observation of subgrade preparation for paved and building areas.

B. The Geotechnical Engineer of Record should be notified at least three (3) days in advance of the start of construction. A joint meeting between the Contractor and Geotechnical Engineer is recommended prior to the start of construction to discuss specific procedures and scheduling. The Geotechnical Engineer should be present to observe the soil conditions encountered during construction, to evaluate the applicability of the recommendations presented in the Soils Report to the soil conditions encountered, and to recommend appropriate changes in design or construction if conditions differ from those described herein. The Geotechnical Engineer of Record should inspect and approval all imported backfill material prior to its placement as backfill, approve the subgrade beneath all fills, fill placement and bottom of all foundation excavations before concrete or steel is placed.

C. The Geotechnical Engineer shall submit compaction reports to the District at the completion of the work, including test results and plot plans indicating the locations from which the tested samples of fill were taken. The Geotechnical Engineer shall keep the District informed on the progress of the grading work.

1.06 IMPORT AND EXPORT OF EARTH MATERIALS

A. Fees: Pay as required by government authority having jurisdiction over the area.

B. Bonds: Post as required by government authority having jurisdiction over the area.

C. Hauling Routes and Restrictions: Comply with requirements of authorities having jurisdiction over the area.

1.07 TRUCK HAUL ROUTE

A. A proposed truck haul route is to be submitted to the City Public Works Department for review and approval. Upon approval, an approved copy shall be returned to the Contractor. The Contractor shall post an approved copy on the job site. All trucks working that project shall also carry a copy. If a truck(s) is found not to be carrying an approved copy, the Contractor shall be subject to a Notice of Noncompliance (stop work order)

B. All trucks must cover their dirt with an acceptable tarp during transport for dust containment. Provisions for street sweeping and watering will also be required unless an active wheel washing facility proves that they are un-necessary to the satisfaction of the Engineer.

C. All truck haul routes, as approved, are good only for the project time period, and trucks shall have to comply with the approved route only. If during the progress of the project an alternate route is needed, the Contractor shall submit a new plan. The haul route application shall contain the following information:

1. Map showing the proposed route
2. Project name
3. Grading Contractor’s name, address and phone number
4. Type of material being hauled
5. Encroachment or construction permit number

1.08 DIG ALERT NOTIFICATION

A. Before any excavation in or near the public right-of-way, the Contractor must contact the Underground Service Alert of Southern California (Dig Alert) at 811 for information on buried utilities and pipelines.

B. Delineation of the proposed excavation site is mandatory. Mark the area to be excavated with water soluble or chalk based white paint on paved surfaces or with other suitable markings such as flags or stakes on unpaved areas.

C. Call at least Two (2) full working days prior to digging.

D. If the members (utility companies) have facilities within the work area, they will mark them prior to the start of your excavation and if not, they will let you know there is no conflict. A different color is used for each utility type (electricity is marked in red, gas in yellow, water in blue, sewer in green, telephone and cable TV in orange).

E. The Law requires you to hand expose to the point of no conflict 24" (inches) on either side of the underground facility, so you know its exact location before using power equipment.

F. If caught digging without a Dig Alert ticket you can be fined as much as $50,000 per California government code 4216.

1.09 PROJECT CONDITIONS

A. Data: Maps, boring logs, geotechnical and foundation investigation reports, and like reference data, not included in Contract Documents but made available to Contractor by Architect or Owner are for information only, and the Architect and Owner assume no responsibility for any conclusions Contractor may draw from such information. Should questions or issues arise, contact Architect or Owner for clarification.

B. Contractor shall determine existing conditions under which the Contractor will operate in performing the Work

C. Information on Drawings does not constitute a guarantee of accuracy or uniformity of soil conditions over the Project site.

D. Existing utilities: Locate existing underground utilities in all areas of work prior to excavation or commencement of work. If utilities are to remain in place provide adequate means of protection during earthwork operations.

1. Should uncharted, or incorrectly charted piping or other utilities be encountered during excavation, consult Utility Owner immediately for direction. Cooperate with Owner and Utility companies in keeping respective services and facilities in operation. Repair damaged utilities to the satisfaction of Utility Company.

2. Do not interrupt existing utilities serving facilities occupied or used by Owner, or others, except when permitted in writing by Owner's Representative, and then only after acceptable temporary services have been provided.

3. Demolish and completely remove from site existing underground utilities indicated to be removed. Coordinate with utility companies for shut off of services if lines are active.

E. Noise and Dust Abatement: Exercise all reasonable and necessary means to abate dust, dirt rising and undue noise. Perform necessary sprinkling and wetting of construction site to allay dust as required by applicable codes and ordinances.

F. Water for Grading: Contractor shall obtain and pay for all water required for his grading operation. This may include, but is not limited to, payment of deposits to utility for construction meter, and payment of all monthly service and water charges. Construction meter shall be in place throughout construction period unless alternative arrangements are made with the local water provider to provide construction water for all purposes. Contractor shall be aware of water moratoriums and restrictions, and shall immediately advise Owner of effects on construction schedules.

G. Existing Conditions: Prior to commencing work at site, verify agreement of existing conditions with indicated conditions. Notify Owner's Representative in writing of discrepancies found. Start of work without notification constitutes acceptance of conditions, without cause for extra compensation.

PART 2 - PRODUCTS

2.01 SOIL MATERIALS

A. General: All soils materials to be used throughout the site shall be approved for use by the Geotechnical testing engineer. Provide approved borrow soil materials from off site when sufficient approved soil materials are not available from excavations.

B. No earthwork analysis has been completed with respect to the volumes of soils to be excavated, placed, or imported in order to provide the finished grades shown on the plans. The Contractor is solely responsible for verifying the earthwork quantities necessary to complete the project.

C. For earthwork volume estimating purposes, an average shrinkage volume of 10 to 20 percent and subsidence of 0.10 – 0.20 feet may be assumed for the surficial soils. These values are estimates only and exclude losses due to removal of vegetation and debris. Actual shrinkage and subsidence will depend on the types of earthmoving equipment used and should be determined during grading.

D. Satisfactory Soil Materials: Soils approved by the testing geotechnical engineer and free of rock or gravel larger than 3 inches in any dimension, debris, waste, vegetation and other deleterious matter and as approved by the Geotechnical Engineer. Rocks or hard lumps larger then approximately 3 inches in diameter should be broken into smaller pieces or should be removed from the site.

E. Borrow / Imported Fill Material: Soil excavated from site or imported conforming to requirements for fill material.

1. Materials for the fill shall be free from vegetable matter and other deleterious substances, shall not contain rocks or lumps of a greater dimension than is recommended by the geotechnical consultant, have an expansion index of 10 or less and shall be approved by the geotechnical consultant.

2. Imported soil should consist of predominately granular soil free of organic matter and rocks greater than 3 inches. Imported soil should have an expansion index of 20 or less and should be inspected and, if appropriate, tested by the geotechnical engineer prior to transport to the site.

F. Native Materials: The existing on-site fill material has been determined to be suitable for being used as compacted fill under the building slab and site hardscape as long as it has an expansion index of 20 or less.

G. Engineered Fill: Satisfactory Soil Materials / Borrow Fill Material, as described above, placed in lifts no greater than 8 inches thick (loose measurements), and compacted to a minimum of 90% of the soil’s maximum dry unit weight.

H. Bedding Material for Trenches:

1. Bedding sand shall be as defined by Standard Specifications, Section 200-1.5, and shall be free of expansive material and organic matter. Bedding material for utility lines outside the property lines shall be as required by the agency having jurisdiction. On-site soils are not considered suitable for bedding or shading of utilities.

2. Sand providing a sand equivalent of at least 30. All of the sand bedding shall be compacted to 90 percent of maximum density as indicated in the Contract Documents by mechanical means. Flooding and jetting shall not be permitted without prior written approval from the Geotechnical Engineer. Where sheeting or shoring is used densification of the bedding shall be accomplished after the sheeting or shoring has been removed from the bedding zone, unless the sheeting or shoring is to be cut off or left in place. Pipe bedding material shall be placed in horizontal layers not exceeding (8) eight inches.

I. Backfill Material for Trenches:

1. The on-site soils have been determined to be suitable for being used for backfilling purposes in trenches. Utility trenches should be backfilled with granular materials (EI less than 20) and mechanically compacted to at least 90% of the maximum dry density of the soils.

J. Gravel Fill Material: Shall be from an approved source, having the following gradation: 90-100% passing a 3/4" sieve, 0% to 10% passing a No. 4 sieve, and 0% to 3% passing a No. 100 sieve.

K. Filter Fabric: Manufacturer's standard nonwoven geotextile fabric of polypropylene geotextiles, “Mirafi 140N” or approved equal.

2.02 EXCAVATION SUPPORT & PROTECTION – SHORING PLAN

A. The CONTRACTOR shall have at the Worksite, copies or suitable extracts of: Construction Safety Orders, Tunnel Safety Orders and General Industry Safety Orders issued by the State Division of Industrial Safety. The CONTRACTOR shall comply with provisions of these and all other applicable laws, ordinances, and regulations.

B. Before excavating any trench 5 feet or more in depth, the CONTRACTOR shall submit a detailed plan to the Owner showing the design of shoring, bracing, sloping, or other revisions to be made for the Workers’ protection from the hazard of caving ground during the excavation of such trench. If the plan varies from the shoring system standards, the plan shall be prepared by a registered Civil Engineer. No excavation shall start until the OWNER has accepted the plan and the CONTRACTOR has obtained a permit from the State Division of Industrial Safety. A copy of the permit shall be submitted to the OWNER.

C. The INSPECTOR will provide a competent person trench/excavation certification form to the CONTRACTOR. It shall be completely filled out before any worker has access to trench or excavation and returned to the INSPECTOR before the end of the first working day. The CONTRACTOR shall certify by this form the name of the competent person administering the Work, the soil classification, and the type of excavation protective system provided and/or installed.

D. The CONTRACTOR shall completely fence all excavations to provided protection against anyone falling into the excavation and to the satisfaction of the INSPECTOR. The fencing shall be in place at all times except when workers are present and actual construction operations are in progress.

E. The fencing material shall be chain link fabric or welded wire fabric (6x6-W9xW9 minimum) and 6 feet high, constructed according to one of the following:

1. Tensioned fencing material and have top and bottom tension wires securely fastened to driven steel posts or other equally rigid elements at a maximum spacing of 12 feet; or

2. Untensioned fencing materials securely fastened to extended trench shoring elements at a maximum spacing of 8 feet and fastened to continuous top and bottom rails constructed of

nominal 2 in x 4 in lumber or equally rigid material. Framed panels with suitable supporting elements fastened together to form a continuous fence may also be used.

F. Payment for performing all work necessary to provide safety measures shall be included in the prices bid for other items of work except where separate bid items for excavation safety are provided, or required by law.

PART 3 - EXECUTION

3.01 PREPARATION

A. Protect adjacent property and existing improvements and structures as necessary to prevent undermining, caving of cuts, and miscellaneous damage.

B. Provide cribbing, sheeting, and shoring necessary to safely retain the earth banks and protect excavations and adjoining grades from caving and other damage resulting from excavating together with suitable forms of protection against bodily injury to personnel employed on the work and the general public. Be responsible for the design, installation, and maintenance of required cribbing and shoring and shall meet the approval of the State Division of Industrial Safety and local governing agencies requirements.

C. Utility lines and structures shown shall be protected and treated as indicated. Where work not shown is encountered, report it to the Architect before proceeding with excavation. Encase active lines in sleeves where they pass through concrete; remove inactive lines as directed, and plug the remaining ends. Bear the costs for repairs to damaged or broken utilities and any damages related thereto.

D. Protect existing improvements and adjacent properties from storm damage and flood hazard originating on this project until final acceptance by the Owner. Prevent silt run-off from the limits of work in accordance with governmental requirements.

E. A 6 foot high, temporary chain link fence with visual screen and gates, (pair 26' wide, minimum) shall be erected prior to any grading operations at the construction limits perimeter. Coordinate the exact location with Architect and OWNER.

3.02 DEWATERING

A. Prevent surface water and subsurface or ground water from entering excavations, from ponding on prepared subgrades, and from flooding Project site and surrounding area. Any water entering an excavation shall be immediately pumped out and the exposed excavation allowed to ry.

B. Protect subgrades and foundation soils from softening and damage by rain or water accumulation.

3.03 GRADE STAKES

A. The Contractor’s Surveyor will set grade stakes. The Surveyor shall be a California registered land surveyor or licensed Civil Engineer. The Surveyor shall be hired and paid by the Contractor, and shall be subject to the approval of the OWNER. Contractor shall notify the OWNER at least 48 hours before staking is to be started. The OWNER will determine if work is ready for staking.

B. All work shall conform to the lines, elevations, and grades shown on the Construction Plans. Three consecutive points set on the same slope shall be used together so that any variation from a straight grade can be detected. Any such variation shall be reported to the Engineer. In the absence of such report, the Contractor shall be responsible for any error in the grade of the finished work.

C. Protect and maintain stakes in place until their removal is approved by the OWNER. Grade or location stakes lost or disturbed by Contractor, shall be reset by the Surveyor at the expense of Contractor.

D. Grades for underground conduits will be set at the surface of the ground. The Contractor shall transfer them to the bottom of the trench.

3.04 TEMPORARY EXCAVATIONS

A. Temporary excavations 4 feet deep or less can be made vertically. Deeper temporary excavations in fill should be laid back no steeper than 1:1 (horizontal:vertical). Deeper temporary excavations in formational materials should be laid back no steeper than ¾:1 (horizontal:vertical). The faces of temporary slopes should be inspected daily by the contractor's Competent Person before personnel are allowed to enter the excavation. Any zones of potential instability, sloughing or raveling should be brought to the attention of the Engineer and corrective action implemented before personnel begin working in the excavation. Excavated soils should not be stockpiled behind temporary excavations within a distance equal to the depth of the excavation. Geotechnical engineer should be notified if other surcharge loads are anticipated so that lateral load criteria can be developed for the specific situation. If temporary slopes are to be maintained during the rainy season, berms are recommended along the tops of slopes to prevent runoff water from entering the excavation and eroding the slope faces. Slopes steeper than those described above will require shoring. A shoring system consisting of soldier piles and lagging can be used.

3.05 SITE PREPARATION AND GRADING

A. Site preparation should begin with the removal of existing improvements, vegetation and debris. Any existing fill soils should be completely removed and replaced as compacted fill. Any existing utilities that will not remain in service should be removed or properly abandoned. Voids created by the removal of materials or utilities, and extending below the recommended overexcavation depth, should be immediately called to the attention of the geotechnical engineer. No fill should be placed unless the geotechnical engineer has observed the underlying soil.

3.06 EXCAVATION FOR BUILDING FOOTINGS

A. Soils beneath the anticipated modular building, including all artificial fill if encountered, should be removed to a depth of one (1) foot below the bottom of the proposed footings. A soils engineer should observe the bottom of the excavations. Upon approval, the exposed soils and soils in areas to receive engineered fill should be scarified to a minimum depth of 12 inches, moistened to at least two percent above the optimum moisture content and compacted to a minimum relative compaction of 90 percent (ASTM D 1557). The horizontal extent of removals should be at least five feet or should extend at least a distance equal to the depth of overexcavation below the bottom of the structural elements, whichever is greater.

3.07 EXCAVATION, BACKFILL & COMPACTION FOR UTILITIES

A. Field conditions may require deviations from information indicated on Drawings. Such changes in work shall be covered by a Change Order, indicating an increase or decrease in the Contract sum.

B. Before excavation, Contractor shall contact the "Underground Service Alert of Southern California" (USASC) for information on buried utilities and pipelines.

C. When connections are to be made to any existing pipe, conduit, or other appurtenances, the actual elevation or position of which cannot be determined without excavation, the Contractor shall excavate for, and expose, the existing improvement before laying any

pipe or conduit. The Engineer shall be given the opportunity to inspect the existing pipe or conduit before connection is made. Any adjustments in line or grade which may be necessary to accomplish the intent of the plans will be made, and the Contractor will be paid for any additional work resulting from such change in line or grade.

D. Trenches, ditches, pits, sumps, and similar items which are outside the barricaded working area shall be barricaded to conform to Cal OSHA standards.

E. Trenches over 5'-0" in depth shall conform to the Construction Safety Orders of the California Division of Industrial Safety, see Section 2.3 EXCAVATION SUPPORT & PROTECTION – SHORING PLAN.

F. Safe and suitable ladders which project 2 feet above the top of the trench shall be provided for all trenches over 4 feet in depth. One ladder shall be provided for each 50 feet of open trench, or fraction thereof, and be so located that workers in the trench need not move more than 25 feet to a ladder.

G. Where indicated and/or required to excavate in lawn areas, protect adjoining lawn areas outside of the Work area. Replace or install removed sod upon completion of backfill by installing sod level with adjacent lawns. If installation of removed sod fails, furnish sod and install to match existing lawns.

H. Utility trenches in landscape or unimproved areas should be backfilled with approved fill material compacted to relative compaction of not less than 85 percent of maximum density determined in accordance with ASTM D 1557. Backfill shall be placed in layers not exceeding 8” (inches) in thickness.

I. Utility trench backfill beneath structures, pavements and hardscape should be compacted to at least 90% relative compaction. The top 12 inches of subgrade beneath pavements should be compacted to at least 95% relative compaction. Backfill shall be placed in layers not exceeding 8” (inches) in thickness.

J. Backfill over excavations to the required elevations with earth, gravel, sand, or concrete and compact as required. Provide excavations free from standing water by pumping, draining, or providing protection against water intrusion. Slope adjacent grades away from excavations to minimize entry of water.

K. Do not excavate trenches parallel to footings closer than 18" from the face of the footing or below a plane having a downward slope of 2 horizontal to one vertical, from a line 9" above bottom of footings.

L. If soft, spongy, unstable, or other unsuitable material is encountered upon which the bedding material or pipe is to be placed, this material shall be removed to a depth ordered by the Engineer and replaced with bedding material suitably densified. Additional bedding so ordered, over the amount required by the Plans or Specifications, will be paid for as provided in the Bid. If the necessity for such additional bedding material has been caused by an act of failure on the part of the Contractor or is required for control of groundwater, the Contractor shall bear the expense of the additional excavation and bedding.

M. Unless indicated otherwise on the plans are within this specification, excavate trenches to the required depths for utilities, such as pipes, conduit and tanks, with minimum allowances of 6 inches at the bottom and 6 inches at the sides for bedding of unprotected piping or as required for concrete encasement of conduits as indicated on Drawings. Maximum allowances at the sides for trenching shall be 12 inches. Grade bottom of trenches to a uniform smooth surface. Remove loose soil from the excavation before installing sand bedding or concrete encasement.

N. Where portions of existing structures, walks, paving, etc. must be removed or cut for pipe or conduit installation, replace the material with equal quality, finished to match adjacent work.

O. Provide a minimum clear dimension of 6 inches from sides of wall excavation to outer surfaces of buried pipes or conduits installed in the same trench or outside surfaces of containers and/or tanks.

P. DO NOT place backfill until the bedding and pipe work installed has been inspected, tested and approved by the Inspector. Remove excavated rocky material unsuitable for backfill from the site prior to final backfilling.

Q. Bedding material immediately around a utility line and to a point 12 inches above the line should consist of sand, fine-grained gravel, or cement slurry to support the line and protect it.

R. Bedding zone shall be defined as the area containing the material specified that is supporting, surrounding, and extending to 12” (inches) above the top of pipe for sewer and water and 6” (inches) above the top of pipe for storm drains. Compaction requirements in this area must meet 90%.

S. Bedding material shall first be placed on a firm and unyielding subgrade so that the pipe is supported for the full length of the barrel. There shall be 6” (inch) minimum of bedding below the pipe barrel and 1” (inch) clearance below a projecting bell for sewer, storm drain and water pipe. The material in the bedding zone shall be placed and densified by mechanical compaction only.

T. Mechanically compacted backfill shall comply with section 306-1.3.2 of the Standard Specifications for Public Works Construction.

U. Above the bedding, up to finished subgrade at areas other then landscape areas and up to one foot below flatwork and pavements, utility trenches should be backfilled with granular materials and mechanically compacted to at least 90%.

V. Below pavements, a minimum relative compaction of 90% will be required in the upper on foot of the backfill.

W. Concrete backfill trenches that carry below or pass under footings and that are excavated within 18 inches of footings. Place concrete to level of bottom of footings.

X. Fill voids with approved backfill materials as shoring bracing and sheeting is removed.

3.08 INSPECTION & TESTING AT TRENCHES

A. Pipe will be inspected in the field before and after laying. If any cause for rejection is discovered in a pipe after it has been laid, it shall be subject to rejection. Any corrective work shall be approved by the Engineer and shall be at NO cost to the Owner.

B. The Inspector or Geotechnical Engineer will inspect all subgrades and excavations prior to placing bedding & backfill materials.

C. DO NOT place backfill until the bedding and pipe work installed has been inspected, tested and approved by the Inspector. Remove excavated rocky material unsuitable for backfill from the site prior to final backfilling.

D. Utility backfill compaction test shall be performed in accordance with ASTM D1557, method "C".

E. Utility backfill in place density test per ASTM D 1556 (sand cone) or other test method as considered appropriate by the Geotechnical Engineer.

F. Hydrostatic pressure tests shall be done only after backfill has been placed and final compaction has been achieved.

3.09 APPROVAL OF SUBGRADE

A. Notify Geotechnical Engineer when excavations have reached required over-excavation subgrade.

B. When Geotechnical Engineer determines that unforeseen unsatisfactory soil is present, continue work only after receiving direction from the Contracting Officer.

C. Reconstruct subgrades damaged by rain, accumulated water or construction activities as directed by the Soils Engineer.

3.10 UNAUTHORIZED EXCAVATION

A. Fill of unauthorized excavation below bottoms of foundations or wall footings will be engineered fill.

B. Fill unauthorized excavations under other construction as directed by the Soils Engineer.

C. Where indicated widths of utility trenches are exceeded, provide stronger pipe, or special installation procedures, as required by the Geotechnical Engineer.

3.11 STORAGE OF SOIL MATERIALS

A. After the site has been stripped of all debris, vegetation and organic materials, excavated on site soils may be reused as engineered fill provided they meet the satisfactory soils material conditions in Section 2.01, part D. High in-site moisture contents will require aeration prior to placement as engineered fill.

B. Stockpile excavated materials acceptable for backfill and fill soil materials, including acceptable borrow materials. Stockpile soil materials without intermixing. Place, grade, and shape stockpiles to drain surface water. Stockpile soil materials away from edge of excavations. Do not store within drip line of remaining trees. Cover to prevent wind-blown dust.

3.12 PLACEMENT OF ENGINEERED FILL

A. Spreading and Compacting Fill Material:

1. Fill should be placed in 6- to 8-inch thick loose lifts, moisture conditioned to near optimum moisture content, and compacted to at least 90% relative compaction. The maximum dry density and optimum moisture content for the evaluation of relative compaction should be determined in accordance with ASTM D 1557. Utility trench backfill beneath structures, pavements and hardscape should be compacted to at least 90% relative compaction..

2. When backfilling and compacting behind retaining walls and flexible retaining structures, the Contractor shall use lightweight compaction equipment such as hand-operated equipment, shoring, or other means to avoid over-stressing structural walls. When using lightweight compaction equipment, the fill materials shall be spread in horizontal layers not greater than 6 inches thick, measured before compaction.

B. Compaction Testing:

1. The Geotechnical Engineer's representative shall observe the excavation, filling, and compacting operations and shall make density tests in the fill material so that he can state his opinion as to whether or not the fill was constructed in accordance with the specifications. If the surface is disturbed, the density tests shall be made in the compacted materials below the disturbed zone. When these tests indicate that the density or moisture

content of any layer of fill or portion thereof does not meet the specified density or moisture content, the particular layer or portions shall be reworked until the specified density and moisture content have been obtained.

2. Sampling and testing of materials for determination of compliance with the specified compaction requirements will be conducted by the Geotechnical Engineer's representative at any location and time as the Owner may determine.

3. The Contractor shall be responsible for excavation of the test pits and for providing and installing any shoring, ladders, or other equipment necessary to protect the testing personnel. The Contractor shall also suspend operations as necessary and at no cost to the owner for the purpose of conducting such testing.

4. Test pits shall be excavated in the backfill by the Contractor as directed by the Engineer for the purpose of testing the backfill compaction. At the option of Engineer, density tests may be taken on a lift of compacted backfill immediately before placing the next lift.

5. Any settlement noted in backfill, fill, or in structures built over the backfill or fill within the one-year warranty period will be considered to be caused by improper compaction methods and shall be corrected at the Contractor's expense. Structures damaged by settlement shall be restored to their original condition by the Contractor at the Contractor's expense.

6. When initial compaction testing performed by the Engineer indicates the required density has not been obtained, the Contractor shall re-compact or replace the backfill as necessary to meet the specified minimum density.

7. The Contractor shall be responsible for rescheduling compaction testing with the Engineer and shall bear all costs for subsequent retesting in the areas of noncompliance. Costs associated with retesting and scheduling delays shall be the sole responsibility of the Contractor. The Engineer will deduct the costs for testing of materials and work found to be unacceptable, as determined by the tests performed by the Owner and the costs for testing of material sources identified by the Contractor which are not used for the work, from moneys due or to become due to the Contractor. The amount deducted will be determined by the Engineer.

3.13 BACKFILL - GENERAL

A. Backfill excavations promptly, but not before completing the following:

1. Acceptance of construction below finish grade including, where applicable, dampproofing, waterproofing, and perimeter insulation.

2. Surveying locations of underground utilities for record documents.

3. Testing, inspecting, and approval of underground utilities.

4. Concrete formwork removal.

5. Removal of trash and debris from excavation.

6. Removal of temporary shoring and bracing, and sheeting.

7. Installing permanent or temporary horizontal bracing on horizontally supported walls.

3.14 GRADING

A. Rough & Fine Grading: Rough grade area sufficiently high to require cutting by fine grading.

B. General: Uniformly grade areas to a smooth surface, free from irregular surface changes. Comply with compaction requirements and grade to cross sections, lines, and elevations indicated.

1. Provide a smooth transition between existing adjacent grades and new grades.
2. Cut out soft spots, fill low spots, and trim high spots to conform to required surface tolerances.
3. Grade area for paving to a depth below finish grades indicated, equal to base and pavement thickness to be constructed.
4. Cut banks neatly to required finish grades as cut progresses, or leave cuts full and finish grading by mechanical equipment, which will produce finish grades indicated on Drawings.
5. Grade filled banks full and compact beyond grade of finish bank so that when trimmed to finish grades, soil is compacted to density specified for final slope face.
6. Bring areas to be graded to approximate finish grades and then scarify, moisten and roll to obtain required density. Scarify, moisten and roll resulting high and low areas to obtain required finish grades by cutting and filling.
7. Grade future planting areas so that, upon cultivation and fertilization, they will conform to finish grades indicated for planting areas.
8. Protect all utilities.

C. Site Grading: Slope grades to direct water away from buildings and to prevent ponding. Finish subgrades to required elevations within the following tolerances:

1. Building pad tolerance plus or minus ½ inch (0.05-foot).
2. Lawn or Unpaved Areas: Plus or minus (0.10-foot).
3. Walks: Plus or minus (0.04-foot).
4. Pavements: Plus or minus (0.04-foot).

D. Grading Inside Building Lines: Finish subgrade to a tolerance of ½ inch when tested with a 10-foot straightedge.

3.15 FIELD QUALITY CONTROL

A. The CONTRACTOR shall provide an independent approved California Department of Health Services certified testing laboratory, to perform sampling and testing of imported fill materials in accordance with the terms as specified in Section 01440 – Import Material Testing.

B. A Geotechnical Engineer, designated by the Owner, will be engaged to perform continuous inspection of the placing and compacting of all fills and backfills within the limits of grading of this project. All work shall be done in accordance with the approved plans and these specifications and as recommended and approved by the Geotechnical Engineer. Revised recommendations relating to conditions differing from the approved soils engineering and engineering geology reports shall be submitted to the owner, inspector, architect and the civil engineer. Costs for all such inspections and tests shall be paid by the Owner. The Contractor shall be responsible for notifying the Geotechnical Engineer in advance so that he may be present to perform his services as needed.

C. The Geotechnical Engineer shall submit compaction reports to the Construction Manager and the Architect at the completion of the work, including test results and plot plans indicating the locations from which the tested samples of fill were taken. The Geotechnical Engineer shall keep the Construction Manager informed on the progress of the grading work.

D. Testing Agency Services: Allow testing agency to inspect and test each subgrade and each fill or backfill layer. Do not proceed until test results for previously completed work verify compliance with requirements.

1. Perform field in-place density tests according to ASTM D 1556 (sand cone method) or other test method as considered appropriate by Geotechnical Engineer.

    a. Field in place density tests may also be performed by the nuclear method according to ASTM D 2922, provided that calibration curves are periodically checked and adjusted to correlate to tests performed using ASTM D 1556. With each density calibration check, check the calibration curves furnished with the moisture gages according to ASTM D 3017.

    b. When field in place density tests are performed using nuclear methods, make calibration checks of both density and moisture gages at beginning of work, on each different type of material encountered, and at intervals as directed by the Architect.

2. Paved and Building Slab Areas: At subgrade and at each compacted fill and backfill layer, perform at least one field in-place density test for every 2,000 sq. ft. or less of paved area or building slab, but in no case fewer than three tests.

3. Foundation Wall Backfill: In each compacted backfill layer, perform at least one field in place density test for each 100 feet or less of wall length, but no fewer than two tests along a wall face.

4. Trench Backfill: In each compacted initial and final backfill layer, perform at least one field in place density test for each 150 feet or less of trench, but no fewer than two tests.

E. When testing agency reports that subgrades, fills, or backfills are below specified density, scarify and moisten or aerate, or remove and replace soil to the depth required, recompact and retest until required density is obtained.

F. Owner's inspector will inspect foundation excavations when completed and ready for forms, after forms are in place, and before first placement of concrete.

3.16 PROTECTION

A. Protecting Graded Areas: Protect newly graded areas from traffic, freezing, and erosion. Keep free of trash and debris.

B. Repair and re establish grades to specified tolerances where completed or partially completed surfaces become eroded, rutted, settled, or lose compaction due to subsequent construction operations or weather conditions.

1. Scarify or remove and replace material to depth directed by the Architect; reshape and recompact at optimum moisture content to the required density.

C. Settling: Where settling occurs during the Project correction period, remove finished surfacing, backfill with additional approved material, compact, and reconstruct surfacing.

1. Restore appearance, quality, and condition of finished surfacing to match adjacent work, and eliminate evidence of restoration to the greatest extent possible.

3.17 MAINTENANCE

A. Install and maintain all temporary erosion control devices, including gravel bags, de-silting basins, inlet barricades, vehicle wash traps, and other features called for on the

Erosion Control Plans and as required per specification 01160 - Storm Water Pollution Control.

B. Reconditioning Compacted Areas: Where completed compacted areas are disturbed by subsequent construction operations or adverse weather, scarify surface, re-shape to required tolerances, and compact to required density prior to further construction.

3.18 DISPOSAL OF SURPLUS AND WASTE MATERIALS

A. Disposal: Remove surplus satisfactory soil and waste material, including unsatisfactory soil, trash, and debris, and legally dispose of it off the Owner's property.

END OF SECTION

SECTION 31 2300

EXCAVATING, BACKFILLING AND COMPACTING

PART 1 - GENERAL

1.01 SUMMARY

A Provisions of the General and Supplementary Conditions and Division 01 apply to this section.

Section Includes:

Excavating, filling, backfilling, and compacting for Project site work.

Trenches for utility lines such as water, gas, concrete-encased conduits, pull boxes and other utility appurtenances.

C Related Sections:

Section : Grading.

Section : Base Course.

Section : A Pavement Repair.

Section : C P .

1.02 SYSTEM DESCRIPTION

A. Import and Export of Earth Materials:

1. Fees: Pay as required by authorities having jurisdiction over the area.

2. Bonds: Post as required by authorities having jurisdiction over the area.

3. Haul Routes and Restrictions: Comply with requirements of authorities having jurisdiction over the area.

1.03 SUBMITTALS

A. Imported Soils: Submit Sample of proposed imported soil. Testing of imported soils shall be in accordance with Section 02310 - Grading.

B. Submission of all material proposed for use shall be per Section 01300.

1.04 QUALITY ASSURANCE

A. Comply with the Standard Specifications for Public Works Construction, current edition, except as modified herein.

PART 2 - PRODUCTS

2.01 FILL AND BACKFILL MATERIALS

A. Fill and backfill material shall be a granular material previously removed from excavation or imported fill material, free of clods and stones larger than 3 inches, (2½ inches for utility trenches) foreign materials, vegetable growths, sod, expansive soils, rubbish and debris. Material shall conform to these specified requirements and related sections.

B. Fill material exhibiting a wide variation in consistency shall be blended to stabilize and upgrade the material.

C. Bedding material from trench bottom to one foot above the pipe:

1. Sand, gravel, crushed aggregate or native free-draining granular material providing a sand equivalent of at least 30 or a coefficient of permeability greater than 1.4 inches per hour.

2. Sand complying with the Specifications for cement concrete aggregates.

D. Other Fill Materials: Brick rubble, broken asphalt pavement, and broken concrete originating from the Project site may be legally disposed of off the Project site, or incorporated in fill, if reviewed by the Owner Consultant. Unless otherwise indicated, no such material shall be imported from outside the Project site.

E. Permeable Backfill:

1. Provide permeable backfill material behind retaining structures consisting of gravel, crushed gravel, crushed rock, natural sands, manufactured sand, or combinations of these materials conforming to the following gradations:

Sieve Size:	Percentage Passing:
3/4 inch (19mm)	100
3/8 inch (10mm)	80-100
No. 100	0-8
No. 200	0-3

2. Those portions of fill material passing a No. 4 sieve shall provide a sand equivalent of at least 60.

3. Provided backing for weep-holes shall consist of 2 cu. ft. of aggregate in burlap sacks, securely tied. Aggregate shall conform to requirements for No. 3 concrete aggregate as specified in subsection 200-1.4 of the Standard Specifications for Public Works Construction.

4. Permeable Backfill Alternate Materials: Instead of the materials specified for retaining structures backfill, a drainage matting system such as Miradrain by Mirafi, Inc., or equal, may be provided if reviewed by the Architect.

F. Cement-sand slurry shall be provided with 1 sack of cement per cubic yard of the mixture.

2.02 BASE MATERIALS

A. Concrete Slabs on Grade: Provide "Crushed Aggregate Base" as specified in Standard Specifications for Public Works Construction, Section 200 - Rock Materials, with 3/4 inch maximum size aggregates. Provide 3 inch thick base, unless noted otherwise.

B. Bituminous Surfacing: Provide as indicated on Drawings and specified in Section 02319 - Base Course.

PART 3 - EXECUTION

3.01 GENERAL

A. Before excavation, contact Underground Service Alert of Southern California (USASC) for information on buried utilities and pipelines.

B. Where the Work includes a building extension or addition on an occupied Project site, perform Work in such a manner, and at such times, as not to disrupt performance of existing utility services to existing Project site facilities. Where an interruption is necessary, obtain review from the OAR before proceeding.

C. Remove concrete or bituminous pavement to straight lines by saw cutting.

3.02 PROTECTION

A. Protect and guard excavations against danger to life, limb, and property as required by, but not limited to, OSHA regulations.

B. Protect existing improvements including landscaping against damage. Repair or replace damaged items.

C. Protect existing utility services and distribution systems from damage or displacement.

D. Remove conduits or pipes not in service, exposed during Work, unless a minimum cover of 2 feet is provided. Remove concrete, clay or other non-metallic pipe over 8 inches in diameter, unless otherwise indicated.

E. Shore, crib, or lag excavations and earthen banks as necessary to prevent cave in, erosion or gullying of sides.

F. Provide excavations free from standing water by pumping, draining, or providing protection against water intrusion. If soil becomes soft, soggy, or saturated, excavate to firm undisturbed earth and fill as required. Slope adjacent grades away from excavations to minimize entry of water.

3.03 SHORING

A. Provide shoring as necessary to properly and safely support earth sides of excavations, and existing curbs, sidewalks, gutter, drives and stairs, against movement and collapse.

B. Design and Calculations: Provide in accordance with requirement of governing California Building Code and Safety Orders of State of California, Division of Industrial Safety; Title 8, Subchapter 4, Article 6, Sections 1530 and 1541.

C. Remove shoring upon completion of the Work of this section or when no longer needed unless required otherwise by authorities having jurisdiction.

3.04 EXCAVATION

A. Unclassified Excavations: Comply with the Standard Specifications for Public Works Construction, Section 300: "Earthwork", except as modified herein.

B. Form sides of footings, pads, grade beams, and slab foundations, unless otherwise indicated. Provide excavations of sufficient size to permit installation and removal of forms and other required Work.

C. Provide excavation bottoms level and free from loose material. Excavate to indicated or required elevations of undisturbed earth.

E. Barricade trenches, ditches, pits, sumps, and similar Work outside the barricaded working area with chain link fence as specified in Section 01500: Construction Facilities and Temporary Controls, and in accord with Cal-OSHA standards and requirements.

F. Trenches over 5 feet in depth shall comply with the Construction Safety Orders of the California Division of Industrial Safety.

G. Where indicated and/or required to excavate in lawn areas, protect adjoining lawn areas outside of the Work area. Replace or install removed sod upon completion of backfill by installing sod level with adjacent lawns. If installation of removed sod fails, furnish sod and install to match existing lawns.

H. For Utilities:

1. Excavate trenches to required depth for utility lines, such as pipes, conduits, and tanks, with minimum allowance of 6 inches at the bottom and 6 inches at the sides for bedding or concrete encasement as indicated on Drawings. Grade bottom of trenches to a uniform smooth surface. Remove loose soil from the excavation before placing sand bedding or concrete encasement.

2. Do not install piping lengthwise under concrete walks without review by the Architect.

3. Do not excavate trenches parallel to footings closer than 18 inches from the face of the footing or below a plane having a downward slope of 2 horizontal to one vertical, from a line 9 inches above bottom of footings.

a. Unless otherwise indicated on Drawings, depth of excavations outside buildings shall provide for a minimum coverage above top of piping, tank or conduit measured from the lowest adjoining finished grade, as follows:

Steel Pipe	24 inches below finish grade
Copper Water Tube	18 inches below finish grade

Cast-Iron, Pressure Pipe	36 inches below finished grade
Plastic Pipe (other than waste)	30 inches below finished grade

4. Where portions of existing structures, walks, paving, or other improvements are removed or cut for piping or conduit installation, replace the material with equal quality, finished to match adjoining existing improvements. Repair pavement as specified in Section 02765 - Pavement Repair.

5. Provide a minimum clear dimension of 2 inches from sides of wall excavation to outer surfaces of buried pipes or conduits placed in the same trench or outside surfaces of containers and/or tanks.

3.05 FILL

A. Unclassified Fill and Compaction: Comply with the Standard Specifications for Public Works Construction, Section 300 - Earthwork, except as modified herein. Install and compact fill in layers not to exceed 6 inches in thickness.

B. Provide fill materials as specified in Part 2- Products. If excavated materials from the Project site are not of required quality or sufficient quantity, import additional materials as necessary.

3.06 INSTALLATION OF MATERIALS

A. Pavement: Fill or backfill materials shall be installed in horizontal layers of 6 inches, unless otherwise required. Each layer shall be evenly placed and moistened or aerated as necessary. Unless otherwise reviewed by the Owner Consultant, each layer of fill material shall cover the length and width of the area to be filled before the next layer of material is installed. Top surface of each layer shall be installed to an approximate level with a crown or crossfall of at least 1 in 50, but not more than 1 in 20. Provide adequate drainage at all times during installation of the Work of this section.

B. Utilities:

1. Do not install backfill until the Work of this section has been inspected and tested. Do not furnish or install materials excavated from the Project site containing materials not permitted for backfill.

2. Backfill electrical or other excavated utility trenches located outside of barricaded installation areas within 24 hours after inspection by the IOR.

3. Install cement-sand slurry at utility trenches to an elevation of the existing undisturbed grades plus one-inch at paved areas and 8” below the finish earth surface in planting areas.

3.07 COMPACTING

A. Each layer of fill material shall be compacted by tamping, sheepsfoot rollers, or pneumatic-tired rollers to provide specified relative compaction. At inaccessible locations, provide specified compaction by manually held, operated and directed compaction equipment.

B. Install and compact sand bedding to provide a uniform bearing under the full length of piping and conduits.

C. Unless otherwise indicated, compact each layer of fill material to a relative compaction of at least 90 percent.

D. When fill materials, or a combination of fill materials, are encountered or provided which develop densely packed surfaces as a result of installation or compacting operations, scarify each layer of compacted fill before installing the next succeeding layer.

3.08 INSPECTION AND TESTING

A. Owner Consultant will inspect and test excavations, material quality, and installation and compaction of fill materials.

B. Installation of backfill shall be observed by the Owner Consultant.

D. Compaction: Test compaction in accordance with ASTM D 1557, Method C.

3.09 PROTECTION

A. Protect the Work of this section until Substantial Completion.

3.10 CLEANING

A. Remove rubbish, debris, and waste materials and legally dispose of off the Project site.

END OF SECTION

SECTION 32 0117

ASPHALT PAVEMENT REPAIR

PART 1 - GENERAL

1.01 SUMMARY

A Section Includes:

Bituminous Surfacing Repair: Areas removed for utility trenches, heaved by tree roots, cracked areas, protruding areas where pavement meets hard surfaces, depressed areas, holes and areas around new structures, and raveled bituminous pavement.

Areas heaved by tree roots, cracked areas, holes and trenches, and areas around new structures.

Related Sections:

Division 01 - General Requirements.

Section - Grading.

Section - Bituminous Surfacing.

Section - C P

Section - Seal for Bituminous Surfacing.

1.02 SUBMITTALS

A. Shop Drawings: Submit Shop Drawings indicating areas to be repaired.

B. Product Data: Submit manufacturer’s technical data for materials and products.

1.03 QUALITY ASSURANCE

A. Comply with Standard Specifications for Public Works Construction, Latest edition.

PART 2 - PRODUCTS

2.01 MATERIALS

A Base course materials: Section - Grading.

Asphalt paving materials: Section - Bituminous Surfacing.

C Seal materials: Section - Seal for Bituminous Surfacing.

Headers: Section - Bituminous Surfacing.

2.02 BITUMINOUS MATERIALS

A. Provide materials and products of the class, grade or type indicated, conforming to relevant provisions of Section 203 - Bituminous Materials of the latest Standard Specifications for Public Works Construction.

PART 3 - EXECUTION

3.01 PAVEMENT REMOVAL

A. Remove bituminous and concrete pavement in accordance with applicable provisions of Section 300 - Earthwork of the Standard Specifications for Public Works Construction.

B. Pavement Heaved By Roots: Remove pavement to limits of distortion and expose roots. Trim roots to provide at least 12-inch clearance to pavement.

C. Remove protruding bituminous surfaces flush with the surrounding grade using a suitable tool or equipment so that adjacent finishes are not blackened.

D. Remove raveled and depressed bituminous pavement to limits indicated or required.

E. Saw cut existing improvements, trim holes and trenches in bituminous and concrete pavement to permit mechanical hand tampers to compact the fill.

F. Remove broken concrete by saw cutting. If the required cut line is within 30 inches of a score or joint line or edge, cut and remove to the score, joint line, or edge.

3.02 EXCAVATING, BACKFILLING AND COMPACTING

A Conform to requirements in Section - Grading.

Where subgrade or base is deemed to be unstable or otherwise unsuitable, excavate such materials to firm earth, and replace with a required material. Install and compact fill materials in accordance with the requirements of related Specification sections.

3.03 HEADERS

A. Install headers along edge of bituminous surfacing abutting turf, earth, or planting area, unless indicated otherwise.

B. Install headers so the bottom surface has continuous bearing on solid grade. Where excavation for headers is undercut, thoroughly tamp soil under the header. Compact backfill on both sides of header to the density of the adjacent undisturbed grade.

C. Fasten headers in place with redwood or Douglas fir stakes of length necessary to extend into solid earth a minimum of 12 inches. Stakes shall be of sound material, neatly pointed, driven vertically, and securely nailed to headers. Space stakes, not to exceed 4 feet on centers with top of stakes set one inch below top of header. Provide a minimum of two 12d galvanized common nails through each stake.

D. Remove existing headers where new surfacing is installed adjacent to existing surfacing.

E. Install temporary headers at transverse joints of paving where continuous paving operations are not maintained.

F. Provide additional stakes and devices as required to fasten headers.

3.04 BASE COURSE

A Unless otherwise indicated on the plans, base course shall be crushed miscellaneous base 3 inches thick or equal to thickness of the existing base, whichever is greater.

Fill grade and compact as specified in Section - Grading.

3.05 RESURFACING

A. Holes and Trenches: Remove loose dirt and backfill with cement-sand slurry allowing for surfacing one inch thicker than existing. Resurface flush with existing adjoining pavement installing the same type of materials and section provided in existing improvements.

B. Other Areas: Other surface improvements damaged or removed shall be cut to a neat even line and excavated one inch below the bottom of the existing pavement. Resurface by following the original grades and installing the same type of materials provided in existing improvements.

C. Where bituminous surfacing abuts concrete, masonry, walks or paving, tamp joint smooth, if necessary, as described above to obtain a uniformly even joint, true to line and grade. Tamp and smooth materials before asphalt cools.

3.06 REPAIRING AND RESEALING EXISTING SURFACES

A. Preparation of Surfaces: Prior to filling cracks, clean existing bituminous surfacing of loose and foreign materials and coat with a film of asphalt emulsion.

B. Repair of Existing Surfacing:

1. Fill cracks ½ inch wide and less with RS-1 emulsion and silica sand or other required material. Cracks larger than ½ inch wide shall be filled with Type C2 Asphalt Concrete as specified. Cracks shall be filled to the level of adjacent surfacing.

2. Where low areas, holes, or depressions occur in existing surfacing, repair with emulsified asphalt. Install material, strike off the emulsified asphalt with a straightedge flush with adjoining surfacing. Finish with a steel trowel, and after dehydration, compact by rolling or tamping.

C. Testing: Flood test entire area in presence of the Project Inspector. Entire area tested shall be free of standing water or puddles.

D. Surface Seal: After surface has been repaired and tested, install seal coat over entire area indicated. Surface seal shall be as specified in Section 02786 - Seal for Bituminous Surfacing.

3.07 CLEANING

A. Remove all stains on the Project site and adjacent properties caused by or attributed to the Work of this section.

B. Remove rubbish, debris, and waste materials and legally dispose of off the Project site.

3.08 PROTECTION

A. Protect the Work of this section until Substantial Completion.

END OF SECTION

SECTION 32 1100

BASE COURSE

PART 1 - GENERAL

1.01 SUMMARY

A Section Includes:

Installation of base material.

Related Sections:

Section : Grading
Section : Excavating, Backfilling and Compacting.

1.02 SUBMITTALS

A. Product Data: Submit technical information and test data for base materials

1.03 QUALITY ASSURANCE

A. Comply with the following as a minimum requirement: Standard Specifications for Public Works Construction, current edition.

PART 2 - PRODUCTS

2.01 UNTREATED BASE MATERIALS

A. The following base materials are classified, in order of preference, in conformance with the requirements of Standard Specifications for Public Works Construction: Section 200 - Rock Materials.

1. Crushed aggregate base or crushed slag base.

2. Crushed miscellaneous base.

3. Processed miscellaneous base.

4. Select sub-base.

5. Disintegrated Granite Base: Conforming to requirements of the Standard Specifications for Public Works Construction: Section 400 - Alternate Rock Products, Asphalt Concrete, Portland Cement Concrete and Untreated Base Material.

2.02 MATERIAL APPROVAL

A. Base material shall be reviewed by the Owner's Consultant before installation.

PART 3 - EXECUTION

3.01 INSTALLATION

A. Install base course material in layers not exceeding 4 inches in thickness, unless required otherwise. Grade and compact to indicated levels or grades, cut and fill, water and roll until the surface is hard and true to line, grade and required section. Provide a relative compaction of at least 95 percent, unless otherwise required.

B. Grade base course to elevations indicated on Drawings, ready to receive surfacing, in accordance with Section 02310: Grading.

3.02 PROTECTION

A. Protect the Work of this section until Substantial Completion.

3.03 CLEANUP

A. Remove rubbish, debris, and waste materials and legally dispose of off the Project site.

END OF SECTION

SECTION 32 1226

BITUMINOUS SURFACING

PART 1 - GENERAL

1.1 REQUIREMENT

A The Contractor shall furnish all tools, equipment, materials, and supplies and shall perform all labor required to complete the work as indicated in the Contract Documents and specified herein.

The following types of pavement shall be covered in this Section:

Paving for utility trenching, parking lots, areas between buildings, adjacent to planting and turf areas, and as indicated on Construction Documents.

C Related Sections:

Section : Grading.
Section : Seal for Bituminous Surfacing.
Section : Pavement Markings.

1.2 QUALITY ASSURANCE

A. The work provided herein shall conform to and be in accordance with the Contract Plans, General Conditions/Specifications and Special Provisions, as well as the Standard Specifications for Public Works Construction (“GREENBOOK”), Latest Edition, adopted by the Southern California Chapter, American Public Works Association; herein referred to as the “Standard Specifications”.

B. The Owner's inspector shall test the temperature of each batch of asphaltic concrete prior to placement. At the time of delivery to the work site, the temperature of mixture shall not be lower than 260 degrees F or higher than 320 degrees F, the lower limit to be approached in warm weather and the higher in cold weather. If asphaltic concrete temperature is not within these tolerances the affected batch shall be rejected. Any and all costs due to the rejected asphaltic concrete shall be the responsibility of the paving contractor.

1.3 ESTABLISHMENT OF GRADES

A. The Contractor’s Surveyor will set grade stakes. The Surveyor shall be a California registered land surveyor or licensed Civil Engineer. The Surveyor shall be hired and paid by the Contractor, and shall be subject to the approval of the Owner. Contractor shall notify the Owner at least 48 hours before staking is to be started. The Owner will determine if work is ready for staking.

B. All work shall conform to the lines, elevations, and grades shown on the Construction Plans. Three consecutive points set on the same slope shall be used together so that any variation from a straight grade can be detected. Any such variation shall be reported to the Engineer. In the absence of such report, the Contractor shall be responsible for any error in the grade of the finished work.

C. Protect and maintain stakes in place until their removal is approved by the Owner. Grade or location stakes lost or disturbed by Contractor, shall be reset by the Surveyor at the expense of Contractor.

D. Areas having drainage gradients of 2 percent or more shall have elevation stakes, set with instrument, at grid intervals of 25 feet. Intermediate stakes may be set by using a tightly-drawn string line over the tops of adjacent stakes. Grade stakes must be set at all grade breaks, grade changes, etc.

E. Areas having drainage gradients of less than 2 percent shall have elevation stakes, set with instrument, at 10 foot intervals. Grade stakes must be set at all grade breaks, grade changes, etc.

1.4 SUBMITTALS

A. Mix Designs: The CONTRACTOR shall formulate a job-mix formula using the Hveem method in accordance with Standard Specifications Section 203-6.2 and submit it to the ENGINEER for approval. The resultant mixture shall have Hveem properties conforming to Standard Specifications Section 203-6.4.3.

B. Samples:

1. Prior to the delivery of specified aggregate to the site, the CONTRACTOR shall submit samples of the material for the INSPECTOR's acceptance in accordance with Standard Specifications Section 4-1.4. Samples shall be typical of materials to be furnished from the proposed source and in conformance with the specified requirements.

2. Aggregate base gradation and quality certifications shall be dated within 30 days of the submittal.

C. Certificates

1. Twenty days prior to the delivery of aggregates, asphalt materials, and paving mixes to the project site, the Contractor shall submit to the Engineer certificates and test results of compliance of such materials with these specifications.
2. Submit certificates of compliance from the supplier for bituminous materials for paint binder, asphaltic concrete, and seal coat.
3. Submit weigh master's certificates or certified delivery tickets for each truck load of asphaltic material delivered to the project site.
4. Upon completion of the weed control treatment, and as a condition for final acceptance, furnish a written certificate stating the brand name of the sterilant and the manufacturer, and that the sterilant used had at least the minimum required concentration, and that the rate and method of application complied in every respect with the conditions and standards contained herein.
5. Prior to import, Contractor shall submit written certification to the Owner's Construction Manager that Crushed Miscellaneous Base (CMB) does not contain Polychlorinated biphenyls (PCB) above laboratory detection limits when tested in accordance with EPA Method 8082.

1.5 QUALITY CONTROL

A. Asphaltic Concrete Producers Qualifications: Use only materials furnished by a bulk asphaltic concrete producer regularly engaged in production of hot mix, hot laid bituminous concrete.

B. Applicator Qualifications: Paving machine and roller operators shall be fully trained and experienced in the installation of asphaltic concrete paving on projects of similar size and complexity.

C. Regulatory Requirements: The quantity of volatile organic compounds (V.O.C.) used in weed killer, seal coat, primer and other materials shall not exceed the limits permitted under the current regulations of the local authorities having jurisdiction.

1.6 ENVIRONMENTAL LIMITATIONS

A. Do not apply asphalt materials if substrate is wet or excessively damp or if the following conditions are not met:

1. Tack Coats: Minimum surface temperature of 60 deg F.
2. Asphalt Base Course: Minimum surface temperature of 40 deg F and rising at time of placement.
3. Asphalt Surface Course: Minimum surface temperature of 60 deg F at time of placement.

1.7 PAVEMENT-MARKING PAINT

A. Refer to section 02788: Pavement Markings.

B. Proceed with pavement marking only on clean, dry surfaces and at a minimum ambient or surface temperature of 40 deg F for oil-based materials, 50 deg F for water-based materials, and not exceeding 95 deg F.

PART 2 - PRODUCTS

2.1 MATERIALS

A. Base Course Material For Use Under Asphalt Pavement: Crushed base material shall consist of materials that meet the provisions listed below.

1. Crushed Miscellaneous Base (CMB) per Section 200-2.4, fine sieve, of the Standard Specifications for Public Works Construction (Green Book).

B. Asphalt Surfacing Materials: Furnish asphalt surfacing meeting the following requirement, furnished from a commercial asphalt central mixing plant.

1. Paint Binder/Tack Coat: Asphalt emulsion shall be CSS-1 or CSS-1h and shall conform to the requirements of Standard Specifications Section 203-3 Emulsified Asphalt.
2. Asphalt Concrete Composition & Grading:
   a. Surface course asphalt concrete shall conform to Standard Specification Section 203-6.4.3, Type C2, with asphalt content of 4.6% to 6.0%.
   b. Base course asphalt concrete, in all areas, shall conform to Standard Specification Section 203-6.4.3, Type B, with asphalt content of 4.5% to 5.8%.
   c. Asphalt performance grade shall be PG-64-10.
   d. At least two courses of asphalt shall be laid when Type C2 asphalt pavement is greater then 3 inches. The surface course shall be a minimum thickness of one inch (1”) and a maximum of two inches (2”).

C. Weed Control:

1. The soils sterilant shall be in accordance with current EPA acceptable standard and the California Department of Pesticide Regulations for soils sterilant. Sterilant shall be selected as appropriate for the environment in which is it to be placed. Contractor shall be licensed with the State of California to apply sterilant. Sterilant shall be commercial grade for commercial application. Payment for soil sterilization will include full compensation for application and all materials and incidental work required.

2. Apply Dow Elanco Spike 80DF, or approved equal, to subgrade prior to asphalt paving at all new asphalt locations shown on the construction documents. Spike 80DF weed control should be applied at the rate of seven pounds per acre. If another manufacturer is used follow their recommendations.

D. Headers and Stakes:

1. Headers: Redwood, Construction Heart Grade, size 2 x 6, unless otherwise indicated on construction drawings
2. Stakes: 2 x 4 redwood or 2 x 3 Douglas fir, Construction Grade.
3. Nails: Common, galvanized, 12d minimum.

PART 3 - EXECUTION

3.1 HEADERS

A. Install headers along edge of bituminous surfacing abutting turf, earth, or planting area, unless indicated otherwise.

B. Install headers so the bottom surface has continuous bearing on solid grade. Where excavation for headers is undercut, thoroughly tamp soil under the header. Compact backfill on both sides of header to the density of adjacent undisturbed earth.

C. Fasten headers in place with redwood or Douglas fir stakes of length necessary to extend into solid grade a minimum of 12 inches. Stakes shall be of sound material, neatly pointed, driven vertically, and securely nailed to headers. Space stakes, not to exceed 4 feet on centers with top of stakes set one inch below top of header. Provide a minimum of 2-12d galvanized common nails through each stake.

D. Remove existing headers where new surfacing is installed adjacent to existing surfacing.

E. Install temporary headers at transverse joints of paving where continuous paving operations are not maintained.

F. Provide additional stakes and anchorage as required to fasten headers in place

3.2 SUBGRADE PREPARATION

A. It is required that areas of exterior asphalt pavement be underlain by a layer of aggregate base material which meets the requirements of section 2.1A herein. Thickness of base layer is as shown on the Construction Documents and varies per the Usage Type area.

1. Site preparation should begin with the removal of existing improvements, vegetation and debris. Existing soil shall be over-excavated to a minimum depth of 18-inches below aggregate base material. Fill should be placed back in thin loose lifts, moisture conditioned to near optimum moisture content and mechanically compacted to at least 90% of the maximum density determined by ASTM Test Method D1557.

2. It is required that the exposed bottom surface soils be scarified to the recommended depth of 6” (inches), brought to near optimum moisture content and rolled with heavy compaction equipment. Scarified soil should be compacted to at least 90% of the maximum dry density obtainable by ASTM D1557 method of compaction.

B. The above subgrade preparation recommendations are based on the assumption that soils encountered during field exploration are representative of soils throughout the site. However,

there can be unforeseen and unanticipated variations in soils between points of subsurface exploration. For this reason, the actual subgrade preparation will have to be determined on the basis of in-grading observations and testing performed by representatives of the project geotechnical consultant.

C. A California Licensed Surveyor (LS) must provide grade stakes and elevations for the Geotechnical Engineer to verify that the over-excavation depths, shown on the construction drawings for asphalt concrete pavement structural sections, have been achieved prior to re-compaction.

D. Subgrade tolerances: Subgrade for pavement shall not vary more than 0.02' from the specified grade and cross section established by the Engineer. Subgrade for subbase or base material shall not vary more than 0.04' from the specified grade and cross section. Variations within the above specified tolerances shall be compensating so that the average grade and cross section specified are met.

E. Correct irregularities by dressing down or filling as may be required, to bring areas to true subgrade elevations.

F. Where filling is required, scarify the subgrade to bond the new material to the in place material; use additional material as required, subject to the approval of the Architect, and provided by the Contractor.

G. Remove excess material from the site to a legal disposal area.

3.3 APPLICATION GENERAL

A. Finish elevations, extent of asphalt paving and locations of type of asphalt and class of base shall be as indicated and specified herein and on the Construction Documents. Bring subgrade elevations sufficiently below the finish elevations of the paving so as to accommodate the thickness of paving and base.

3.4 STERILANT APPLICATION

A. Place herbicide below base course. Meet the applicable environmental control requirements. Apply as directed by the manufacturer's printed instructions just before application of the base course. Sterilant shall not be applied within two feet of planting areas.

3.5 APPLICATION OF BASE COURSE

A. Install base course material, encompassing spreading and compacting, in accordance with the S.S.P.W.C. Section 301-2, Untreated Base.

B. After preparing the subgrade as specified in 3.5.A, all traffic on the subgrade shall be avoided. Should it be necessary to haul over the prepared subgrade, the CONTRACTOR shall drag and roll the traveled way as frequently as may be necessary to remove ruts, cuts, and breaks in the surface. All cuts, ruts, and breaks in the surface of the subgrade that are not removed by the above operations shall be raked and hand tamped. All equipment used for transporting materials over the prepared subgrade shall be equipped with pneumatic tires.

C. Continued use of sections of prepared subgrade for hauling, so as to cut up or deform it from the true cross-section, will not be permitted. The CONTRACTOR shall protect the prepared subgrade from all traffic.

D. Maintain the surface in its finished condition until the succeeding layer is placed.

3.6 PLACING ASPHALT CONCRETE SURFACING:

A. Asphalt binder (tack coat) shall be applied to all existing pavement surfaces to be overlaid and/or joined per section 302-5.4 of the Standard Specifications. Asphalt binder (tack coat) shall be applied to existing surfaces to be surfaced and between layers of asphalt concrete, except when eliminated by the Engineer. A layer of asphalt binder (tack coat) shall be applied to all vertical-cut faces and between subsequent AC lifts.

B. Asphalt Concrete Pavement:

1. All work shall be in accordance with Section 302-5 of the Standard Specifications, except as noted herein. Asphalt concrete work shall include full-depth patching and variable thick asphalt concrete transition areas. The Contractor shall, on a daily basis, provide the Inspector with copies of certificates of weight for all materials delivered to the job site and/or incorporated in the work. At no time shall the coarse aggregate that has segregated from the mix be scattered across the paved mat.
2. Asphalt concrete shall not be placed on any surface, which contains ponded water or excessive moisture in the opinion of the Engineer. If paving operations are in progress and rain or fog forces a shut down, loaded trucks in transit shall return to the plant, and no compensation will be allowed therefore. The Contractor shall furnish and use canvas tarpaulins to cover all loads of asphalt from the time that the mixture is loaded until it is discharged from the delivery vehicle, unless otherwise directed in writing by the Engineer
3. The Inspector will examine the base before the paving has begun. The Contractor will correct any deficiencies before the paving is started.
4. Asphalt concrete of the class indicated in Section 2.B.2 shall be laid in courses conforming to S.S.P.W.C. Table 302-5.5(A) unless otherwise stated herein.
5. At least two courses shall be laid when Type C2 asphalt pavement is greater then 3 inches. The surface course shall be a minimum thickness of one inch (1”) and a maximum of two inches (2”).
6. Successive courses may be laid upon previously laid courses as soon as the previous course has cooled sufficiently to show no perceivable displacement under equipment or loaded material delivery trucks and a tack coat has been applied.
7. Wherever AC pavement does not terminate against a curb, gutter, or another pavement, the Contractor shall provide and install a redwood or pressure treated Douglas fir header at the line of termination.
8. Pavement at all longitudinal joints shall have a Field Density of 95%, as described in 302-5.6.2 of the Standard Specifications. When the test results of the field cores are less than 95% Relative Compaction, the Contractor shall remove a 1 foot wide section on each side of the longitudinal joint. The Contractor shall replace the removed pavement with an asphalt mix that meets the job specification at no additional cost to the Owner.

3.7 FLOOD TESTING

A. Flood Test: Before acceptance, all pavements shall be water tested to ensure proper drainage as directed by the Inspector. The Contractor shall provide water for this purpose. The flooding shall be done by water tank truck. Depressions where the water ponds to a depth of more than 1/8-inch shall be filled or the slope corrected to provide proper drainage. The edges of the fill shall be feathered and smoothed so that the joint between the fill and the original surface is invisible. No standing water shall remain 1-hour after test.

3.8 SEAL COAT

A. Allow new asphalt pavement to cure 30 days before application of seal coat. See Project Specification Section 02786: Seal for Bituminous Surfacing.

3.9 FIELD QUALITY CONTROL

A. Replace or repair deficient and damaged asphalt paving.

B. All paving shall drain properly before being accepted. Upon completion, the pavement shall be true to grade and cross section. When a 10 foot straightedge is laid on the finished surface parallel to the centerline of the roadway, the surface shall not vary from the edge of the straightedge more than 1/8 inch, except at intersections or at changes of grade. Any areas that are not within this tolerance shall be brought to grade immediately following the initial rolling. There shall be no variation greater than 1/4 inch plus or minus from a 10 foot straight edge, except at grade changes. The paving material in the area to be repaired shall be removed, by an approved method, to provide a minimum laying depth of 1 inch, or 2 times the maximum size aggregate, whichever is greater, of the new pavement at the join line. Repairs shall not be made to pavement surface by feather-edging at the join lines. All expenses for pavement repair up shall be borne by the Contractor at NO cost to the Owner.

3.10 PROTECTION

A. Protect the Work of this section until Substantial Completion.

3.11 CLEAN UP

A. Clean all debris and unused materials from the paving operation. Clean all surfaces that have been spattered or defaced as a result of the paving operation. Asphalt or asphalt stains which are noticeable upon surfaces of concrete, or materials which will be exposed to view, shall be promptly and completely removed. Cleaning shall be done in a manner that will not result in any discharge of contaminated materials into any catch basin. All expenses for clean up shall be borne by the Contractor at NO cost to the Owner.

END OF SECTION

SECTION 32 1236

SEAL FOR BITUMINOUS SURFACING

PART 1 - GENERAL

1.01 SUMMARY

A. Section Includes:

1. Surface sealer over new asphalt paved surfaces.

1.02 REFERENCES

A. The work provided herein shall conform to and be in accordance with the Contract Plans, General Conditions/Specifications and Special Provisions, as well as the Standard Specifications for Public Works Construction ("Green Book"), Latest Edition, adopted by the Southern California Chapter, American Public Works Association; herein referred to as the "Standard Specifications".

1.03 SUBMITTALS

A. Product Data: Submit manufacturer's product information and application procedures for bituminous surfacing.

1.04 QUALITY ASSURANCE

A. Comply with the following as a minimum requirement: Standard Specifications Section 203-9, "SEALCOAT – ASPHALT BASED".

B. Obtain materials from same source throughout.

C. Schedule a pre-construction conference at jobsite in advance of beginning of Work. In existing areas to be seal coated and restriped, document existing striping to be duplicated before commencing seal coating work.

D. Review and resolve conflicts involving requirements of specifications. Record discussions and furnish copies to all attendees.

E. Beginning of Work means Contractor accepts all conditions.

F. Agitate bulk materials during transport.

1.05 REGULATORY REQUIREMENTS

A. Comply with local air quality management district regulations for emissions maximums.

B. Maintain control of vehicular and pedestrian traffic during seal coating operations as required for other construction activities and in accordance with local traffic authorities having jurisdiction.

PART 2 - PRODUCTS

2.01 MATERIALS

A. Seal Coat: The materials for sealcoat shall conform to Section 203-9 – "Sealcoat – Asphalt Based" of the Standard Specifications. Before incorporation in the Work, the

Contractor shall submit a 2 Liter (2-quart) sample of undiluted seal coat at no cost to the Owner.

1. Seal Coat: Provide one of the following surface seals:

Product Name	Manufacturer
Over Kote	Diversified Asphalt Product
Park Top No. 302	Western Colloid Products
Drivewalk	Conoco Oil

PART 3 - EXECUTION

3.01 SEALCOATING OF NEW ASPHALT PAVED SURFACES

A. Preparation of Surfaces:

1. Before placing the sealcoat, the pavement surface shall be cleaned by sweeping, flushing or other means necessary to removal all loose particles of paving, all dirt, and all other extraneous material.

2. For best quality, it is recommended that new asphalt must cure 30 days before application of sealcoat.

3. Immediately before commencing the sealcoat operations, all surface metal utility covers (including survey monuments) shall be protected by thoroughly covering the surface with an appropriate adhesive and oiled or plastic paper. No adhesive material shall be permitted to cover, seal or fill the joint between the frame and cover of the structure. A vertical tab shall be placed on each cover for locating after the seal application is complete. The tab shall extend at least 3” above the existing pavement surface. Covers are to be uncovered and cleaned of asphalt emulsion material by the end of the same work day. Inspector shall inspect surfaces before the installation of seal coat.

4. For best results, the asphalt, just prior to being sealed, should be sprayed with a mist of water in an amount that will leave the surface damp but with no puddles or visible water. This procedure is critical when ambient temperature is hot with bright sunlight or when the pavement is excessively aged or porous.

5. A prime or tack coat may be necessary on surfaces that have weathered excessively or are dusted. The primer should be diluted with three parts clean, potable water and one part SS-1h emulsion and shall be applied at the rate of 0.05 gallon per square yard.

6. Install barricades as required to divert traffic from operations. Install temporary “no parking” signs and similar notices.

B. Application:

1. Sealcoat may be mixed with water to obtain desired consistency for job requirements to a maximum of 20% of the total volume. Care should be taken not to over dilute. Material after dilution shall be mixed with a mechanical agitator

to maintain consistency and ease of application. Note that as the pavement increases in roughness, the amount of dilution should be decreased.

2. Sealcoat shall only be applied when the atmospheric temperature is greater than 55 degrees F and if rain is not forecast for the period of 24 hours after application.

3. The sealcoat material shall be applied in two applications. Unless otherwise specified, the total quantity applied (before dilution) shall be 50 gallons per 1,000 square feet.

4. Sealcoat material shall be applied using a truck-mounted tank or wheeled container in continuous parallel lines and spread by means of brooms or rubber-faced squeegees either by hand or machine and in such a manner as to eliminate all ridges, lap marks, and air pockets.

5. Hand tools shall be available in order to remove spillage. Ridges or bumps in the finished surface will not be permitted. Sealcoat material shall be homogeneous prior to spreading, with no visible separation of solids and liquids.

6. When the first coat has completely dried to the touch, apply the second coat. While misting is not normally required before second coat, surface should be clean with no foreign materials on it.

C. Drying Time:

1. Sealcoat should be allowed to dry 24 – 48 hours before permitting traffic. When asphalt is cold or in shade, or air temperature is below 75 degrees F, based on general weather, humidity and temperature conditions, drying time may need to be extended.

3.02 CLEAN UP

A. Remove rubbish, debris and waste materials and legally dispose of off the Project site.

B. Striping for parking or traffic flow should be done only after the sealcoat has thoroughly dried. It is recommended that a high quality water based Traffic Line Paint be used for best results.

3.03 PROTECTION

A. Protect the Work of this section until Substantial Completion.

END OF SECTION

SECTION 32 1313

CONCRETE PAVING

PART 1 - GENERAL

1.01 THE REQUIREMENT

A. The CONTRACTOR shall furnish all materials for concrete in accordance with the provisions of this Section and shall form, mix, place, cure, repair, finish, and do all other work as required to produce finished concrete, in accordance with the requirements of the Contract Documents.

B. Provide curb cuts meeting the accessibility requirements of the California Code of Regulations (CCR) Title 24, Part 2, 1127B.5, and ramps complying with CCR, T24, CCR, Part 2, 1003.3.4 and 11B-406.

C. Portland cement concrete paving shall be stable, firm, and slip resistant and shall comply with CBC Sections 11B-302 and 11B-403.

D. The following types of concrete shall be covered in this Section:

1. Portland cement concrete pavement, cement walks, flatwork, curbs, gutters, retaining curbs, swales, trash pick-up areas, ramps, mowing strips, fence post footings, sliding gate concrete, catch basins, pipe bedding and encasements, transition structures, flagpoles and light standard bases and footings, splash blocks, parking bumpers and equipment pads.

1.02 SUMMARY

A. Documents affecting work of this Section include, but are not necessarily limited to, General Conditions, Supplementary Conditions, Special Conditions and Division 1

1.03 REFERENCE SPECIFICATIONS, CODES, AND STANDARDS

A. Comply with the reference specifications of the GENERAL REQUIREMENTS.

B. The work provided herein shall conform to and be in accordance with the Contract Plans, General Conditions/Specifications and Special Provisions, as well as the Standard Specifications for Public Works Construction (“GREENBOOK”), 2018 Edition, adopted by the Southern California Chapter, American Public Works Association; herein referred to as the “Standard Specifications”.

C. Comply with the current provisions of the following Codes and Standards.

1. Federal Specifications:

a. UU-B-790A (Int.Amd. 1) Building Paper, Vegetable Fiber (Kraft, Waterproofed, Water Repellant and Fire Resistant).

2. Commercial Standards:

a. ACI 214 Recommended Practice for Evaluation of Strength Test Results of Concrete.

b. ACI 301 Specifications for Structural Concrete for Buildings.

c. ACI 315 Details and Detailing of Concrete Reinforcement.

d. ACI 318 Building Code Requirements for Reinforced Concrete.

e. ACI 347 Recommended Practice for Concrete Formwork.

f. ACI 350 Recommended Practice for Sanitary Structure.

g. ASTM C 31 Practices for Making and Curing Concrete Test Specimens in the Field.

h. ASTM C 33 Specification for Concrete Aggregates.

i. ASTM C 39 Test Method for Compressive Strength of Cylindrical Concrete Specimens.

j. ASTM C 40 Test Method for Organic Impurities in Fine Aggregates for Concrete.

k. ASTM C 42 Methods of Obtaining and Testing Drilled Cores and Sawed Beams of Concrete.

l. ASTM C 78 Specification for Flexural Strength.

m. ASTM C 88 Test Method for Soundness of Aggregates by use of Sodium Sulfate or Magnesium Sulfate.

n. ASTM C 94 Specification for Ready-Mixed Concrete.

o. ASTM C 114 Method for Chemical Analysis of Hydraulic Cement.

p. ASTM C 131 Test Method for Resistance to Degradation of Small-Sized Coarse Aggregate by Abrasion and Impact in the Los Angeles Machine.

q. ASTM C 136 Method for Sieve Analysis of Fine and Coarse Aggregate.

r. ASTM C 143 Test Method for Slump of Portland Cement Concrete.

s. ASTM C 150 Specification for Portland Cement.

t. ASTM C 156 Test Method for Water Retention by Concrete Curing Materials.

u. ASTM C 157 Test Method for Length Change of Hardened Hydraulic Cement Mortar and Concrete.

v. ASTM C 172 Specification for Sampling Fresh Concrete.

w. ASTM C 192 Method of Making and Curing Concrete Test Specimens in the Laboratory.

x. ASTM C 260 Specification for Air-Entraining Admixtures for Concrete.

y. ASTM C 289 Test Method for Potential Reactivity of Aggregates (Chemical Method).

z. ASTM C 311 Method for Sampling and Testing Fly Ash or Natural Pozzolans for Use as a Mineral Admixture in Portland Cement Concrete.

aa. ASTM C 494 Specification for Chemical Admixtures for Concrete.

bb. ASTM C 618 Specification for Fly Ash and Raw or Calcined Natural Pozzolan for Use as a Mineral Admixture in Portland Cement Concrete.

cc. ASTM C 979 Specification for Pigments for Integrally Colored Concrete

dd. ASTM D 1751 Specification for Preformed Expansion Joint Fillers for Concrete Paving and Structural Construction (Non-extruding and Resilient Bituminous Types).

ee. ASTM E 119 Method for Fire Tests of Building Construction and Materials.

ff. ASTM C 1549 Method for Determination of Solar Reflectance.

1.04 CONTRACTOR SUBMITTALS

A. Submittals shall be made in accordance with GENERAL REQUIREMENTS.

B. The following submittals and specific information shall be provided.

1. Mix Designs: Prior to beginning the WORK, the CONTRACTOR shall submit to the ENGINEER, for review, and approval, preliminary concrete mix designs for each class and type of concrete specified herein. The mix designs shall be designed by an independent testing laboratory acceptable to the ENGINEER. All costs related to such mix design shall be borne by the CONTRACTOR.

a. Each concrete mix submittal shall contain the following information:

1) Slump on which the design is based.

2) Total gallons of water per cubic yard.

3) Brand, type, composition and quantity of cement.

4) Brand type, composition and quantity of fly ash.

5) Specific Gravity and gradation of each aggregate.

6) Ratio of fine to total aggregate per cubic yard.

7) Weight (surface dry) of each aggregate per cubic yard.

8) Brand, type, and ASTM designation, active chemical ingredients and quantity of each admixture.

9) Copy of the Building and Safety Research Report Approval for each concrete admixture.

10) Air content.

11) Compressive strength based on 7 day and 28 day compression tests, including standard deviation calculations, corroborative data (if applicable), and required average comprehensive strength per ACI 318, Section 5.

12) Time of initial set.

13) Certification stamp and signature by a Civil or Structural engineer registered in state of California.

14) Certificate of Compliance for Cement.

15) Test Data: ASTM C 1549 Solar Reflectance. Submit test reports of proposed mix certifying solar reflectance meets project requirements.

2. Certified Delivery Tickets: Where ready-mix concrete is used, the CONTRACTOR shall provide certified weighmaster delivery tickets at the time of delivery of each load of concrete. Each certificate shall show the public weighmaster's signature, and the total quantities, by weight of cement, sand, each class of aggregate, admixtures, and the amounts of water in the aggregate and added at the batching plant as well as the amount of water allowed to be added at the site for the specific design mix. Each certificate shall, in addition, state the mix number, total yield in cubic yards, and the time of day, to the nearest minute, corresponding to when the batch was dispatched, when it left the plant, when it arrived at the job, the time that unloading began, and the time that unloading was finished.

3. When a water reducing admixture is to be used, the CONTRACTOR shall furnish mix designs for concrete both with and without the admixture.

4. The CONTRACTOR shall furnish a Certificate of Compliance signed by the supplier identifying the type of fly ash and stating that the fly ash complies with ASTM C 618 and these Specifications, together with all supporting test data prior to the use of the fly ash the sample represents. The supporting data shall also contain test results confirming that the fly ash in combination with the cement and water to be used meets all strength requirements and is compatible with air-entraining agents and other admixtures.

5. The CONTRACTOR shall submit to the ENGINEER for review the design mix for fly ash concrete together with the design mix for portland cement (non-fly ash) concrete as specified in this Section.

1.05 QUALITY ASSURANCE

A. Testing for Portland Cement Concrete shall be sampled and tested in accordance with the ASTM and California Tests listed in the Standard Specifications for Public Works Construction, 2018 Edition, Section 201-1.1.5.

B. Samples for strength tests of each class of concrete placed each day shall be taken not less than once a day, or not less than once for each 50 cubic yards of concrete, or not less than once for each 2,000 square feet of surface area for slabs. Additional samples for seven-day compressive strength tests shall be taken for each class of concrete at the beginning of the concrete work or whenever the mix or aggregate is changed.

C. The cost of all laboratory tests on cement, aggregates, and concrete, will be borne by the CONTRACTOR.

D. Concrete for testing shall be supplied by the CONTRACTOR at no cost to the Owner, and the CONTRACTOR shall provide assistance and facilities to the INSPECTOR in obtaining samples, and disposal and cleanup of excess material.

E. Curbs and gutters shall be staked by a Land Surveyor licensed to practice in the State of California.

F. Job Mock-Up

1. General

a. Make samples on-site; revise as required; obtain Architect's approval, 10 days prior to casting finished work.

b. Finished work to match approved samples.

c. Approved sample may be incorporated into the work. Retain samples until completion of all concrete work.

d. Include typical tooled joint control in sample.

2. Color Cured Hardened Slab; Interior Slab-On-Grade: Provide sample, 20 s.f. minimum area.

3. Broom Finished Concrete; Exterior Flatwork: Provide sample, 20 s.f. minimum area.

4. “Sacked” Vertical Surface; Exterior Wall: Provide sample, 5 sf. minimum area.

G. Construction Tolerances: The CONTRACTOR shall set and maintain concrete forms and perform finishing operations so as to ensure that the completed work is within the tolerances specified herein. Surface defects and irregularities are defined as finishes and are to be distinguished from tolerances. Tolerance is the specified permissible variation from lines, grades, or dimensions shown. Where tolerances are not stated in the specifications, permissible deviations will be in accordance with ACI 347.

H. Construction tolerances shall not violate dimensions, grades, slopes required by CBC for accessibility requirements. Adjust work accordingly to comply with requirements.

I. The following construction tolerances are hereby established and apply to finished walls and slab unless otherwise shown:

Item	Tolerance
Variation of the constructed linear outline from the established position in plan.	In 10 feet: 1/8-inch; In 20 feet or more: 1/4-inch
Variation from the level or from the grades shown.	In 10 feet: 1/8-inch; In 20 feet or more: 1/4-inch
Variation from the plumb	In 10 feet: 1/8-inch; In 20 feet or more: 1/4-inch
Variation in the thickness of slabs and walls.	Minus 1/8-inch; Plus 1/4-inch
Variation in the locations and sizes of slabs and wall openings.	Plus or minus 1/8-inch

PART 2 - PRODUCTS

2.01 CONSTRUCTION MATERIALS

A. Materials shall be delivered, stored, and handled so as to prevent damage by water or breakage. Only one brand of cement shall be used. Cement reclaimed from cleaning bags or leaking containers shall not be used. All cement shall be used in the sequence of receipt of shipments.

B. All materials furnished for the work shall comply with the requirements of Sections 201, 203, and 204 of ACI 301, as applicable.

C. Storage of materials shall conform to the requirements of Section 205 of ACI 301.

D. Form Materials: Plywood, metal, metal-framed plywood, or other acceptable panel-type materials to provide full-depth, continuous, straight, smooth exposed surfaces. Conform to Section 303-5.2 of the Standard Specifications.

1. Use flexible or curved forms for curves of a 100-foot or less radius.

E. Reinforcing Materials: As follows:

1. Steel Reinforcing Bars: ASTM A 615 deformed grade 60 billet steel, plain finish, unless otherwise specified on Construction Document. Fabrication, sampling and jobsite handling shall conform to the requirements in ASTM Designation: D 3963, except the 2 samples shall be 30 inches long.

2. Dowels:

a. Dowel bars shall be plain round smooth conforming to the requirements in ASTM Designation: A 615/A 615M, Grade 60 except that the two samples required in ASTM Designation: D 3963/D 3963M shall be 18 inches long. Dowel bars shall be free from burrs or other deformations detrimental to free movement of the bars in the concrete

b. Dowel bars shall be lubricated with a bond breaker over the entire bar. A bond breaker application of petroleum paraffin based lubricant or white-pigmented curing compound shall be used to coat the dowel bars completely prior to placement. Oil and asphalt based bond breakers shall not be used. Paraffin based lubricant shall be Dayton Superior DSC BB-Coat or Valvoline Tectyl 506 or an approved equal. Paraffin based lubricant shall be factory applied. White pigmented curing compound shall conform to the requirements of ASTM Designation: C 309, Type 2, Class A, and shall contain 22 percent minimum nonvolatile vehicles consisting of at least 50 percent paraffin wax. Curing compound shall be applied in 2 separate applications, the last application not more than 8 hours prior to placement of the dowel bars. Each application of curing compound shall be applied at the approximate rate of one gallon per 15 square yards.

3. Epoxy for bonding tie bars and dowel bars to portland cement concrete shall be a two-component, epoxy-resin, conforming to the requirements of ASTM Designation: C 881, Type V, Grade 3 (Non-Sagging), Class B or C. The class used shall be dependent on the internal temperature of the hardened concrete at the time the epoxy is to be applied. Class B shall be used when the internal temperature is from 40 °F to 60 °F. Class C shall be used when the internal temperature is above 60 °F, but not higher than recommended by the manufacturer. A copy of the manufacturer's recommended installation procedure shall be provided to the Engineer at least 7 days prior to the start of work. Epoxy shall be applied in conformance with the manufacturer's recommendations.

a. Simpson Strong Tie Set-XP Epoxy (or approved equal) ICC-ES ESR-2508.

F. Concrete Materials: As follows:

1. Cement shall be standard brand portland cement conforming to ASTM C 150 for Type II. Portland cement shall contain not more than 0.60 percent alkalies. The term "alkalies" referred to herein is defined as the sum of the percentage of sodium oxide and 0.658 times the percentage of potassium oxide (Na20 + 0.658 K20). These oxides shall be determined in accordance with ASTM C 114. A single brand of cement shall be used throughout the work, and prior to its use, the brand shall be acceptable to the ENGINEER. The cement shall be suitably protected from exposure to moisture until used. Cement that has become lumpy shall not be used. Sacked cement shall be stored in such a manner so as to permit access for inspection and sampling. Certified mill test reports for each shipment of cement to be used shall be submitted to the INSPECTOR.

2. Concurrent with strength design criteria, concrete shall also be proportioned to provide the requisite durability to satisfy the exposure conditions imposed by either environment and/or service. Durability, in this context, refers to the ability of the concrete to resist deterioration from the environment or service in which it is placed. Concrete proportioned in accordance with ACI 318, chapter 4, Durability Requirements, will meet this criteria.

3. Combined Aggregate: 1" maximum coarse aggregate size conforming to Grading C of Standard Specifications Section 201-1.3.2(A). Aggregates shall be obtained from pits acceptable to the INSPECTOR, shall be non-reactive, and shall conform to ASTM C 33.

4. Water: Shall be potable, clean, and free from objectionable quantities of silty organic matter, alkali, salts and other impurities. The water shall be considered potable, for the purposes of this Section only, if it meets the requirements of the local governmental agencies.

5. *"Pea gravel" mix is not acceptable,* unless specifically approved in writing by the Civil Engineer of Record prior to construction.

G. Admixtures:

1. The ENGINEER may require the use of admixtures or the CONTRACTOR may propose to use admixtures to control the set, effect water reduction, and increase workability. In either case, the addition of an admixture shall be at the CONTRACTOR's expense. The use and continued use of an admixture shall be approved by the ENGINEER. Admixtures specified herein, other than calcium chloride, shall conform to the requirements of ASTM C 494. The required quantity of cement shall be used in the mix regardless of whether or not an admixture is used. Admixtures shall contain no free chloride ions, be non-toxic after 30 days, and shall be compatible with and made by the same manufacturer as the air entraining admixture.

2. These admixtures shall not be used in greater doses than those recommended by the manufacturer or permitted by the ENGINEER. The permitted dosage of the admixture shall not exceed that which will result in an increase in the driving shrinkage of the concrete in excess of 20 percent when used in precast or prestressed concrete, or 10 percent when used in any other structural concrete. The strength of concrete containing the admixture in the amount of proposed shall, at the age of 48 hours and longer be not less than that of similar concrete without the admixture. The admixture shall not adversely affect the specified air content, unless permitted by the ENGINEER.

3. Set controlling admixture shall be either with or without water-reducing properties. Where the air temperature at the time of placement is expected to be consistently over 80 degrees F, a set retarding admixture such as [Sika Chemical Corporation's Plastiment], [Master Builder's Pozzolith 300R], or equal shall be used. Where the air temperature at the time of placement is expected to be consistently under 40 degrees F, a set accelerating admixture such as [Sika Chemical Corporation's Plastocrete 161FL], [Master Builder's Pozzolith 50C], or equal shall be used.

4. Low range water reducer shall conform to ASTM C 494, Type A. It shall be either a hydroxylated carboxylic acid type or a hydroxylated polymer type. The quantity of admixture used and the method of mixing shall be in accordance with the manufacturer's instructions and recommendations.

5. High range water reducer shall be sulfonated polymer conforming to ASTM C 494, Type F or G.

a. If the high range water reducing agent is added to the concrete at the batch plant, it shall be second generation type, [Daracem 100, as manufactured by W.R. Grace & Co.]; [Pozzolith 430R, as manufactured by Masterbuilders]; or equal. High range water reducer shall be added to the concrete after all other ingredients have been mixed and initial slump has been verified.

b. If the high range water reducer is added to the concrete at the job site, it shall be used in conjunction with a low range water reducer and shall be [Pozzolith 400N and Pozzolith MBL82, as manufactured by Masterbuilders]; [WRDA 19 and WRDA 79, as manufactured by W.R. Grace & Co.]; or equal. Concrete shall have a slump of 3-inches ± 1/2-inch prior to adding the high range water reducing admixture at the job site. The high range water reducing admixture shall be accurately measured and pressure injected into the mixer as a single dose by an experienced technician. A standby system shall be provided and tested prior to each day's operation of the job site system.

6. Air-entraining agent meeting the requirements of ASTM C 260, shall be used. Sufficient air-entraining agent shall be used to provide a total air content of 3 to 4 percent; provided that, when the mean daily temperature in the vicinity of the worksite falls below 40 degrees F for more than one day, the total air content provided shall be 5 to 6 percent. The Owner reserves the right, at any time, to sample and test the air-entraining agent received on the job by the CONTRACTOR. The air-entraining agent shall be added to the batch in a portion of the mixing water. The solution shall be batched by means of a mechanical batcher capable of accurate measurement.

7. Calcium Chloride: Except as otherwise provided herein, calcium chloride will not be permitted to be used in concrete.

8. Fly ash/pozzolan shall conform to ASTM C 618 and the following supplementary requirements:

a. Class F fly ash

o Loss on ignition,	maximum 4 percent
o S03 content,	maximum 3 percent
o Moisture content,	maximum 1 percent

b. Class F fly ash, as a percent by weight of total cementitious material, shall not exceed 15 percent.

c. When Sulfate Resistant or Special Exposure Concrete is specified, test results shall be submitted to the Engineer as specified in Section 2-5.3 of the Standard Specifications. The test result shall show that the fly ash to be used is effective in contributing to sulfate resistance in conformance with ASTM C618, Table 3 (optional physical requirements) as tested in accordance with ASTM C 1012. The data submitted shall be less than 6 months old.

H. Curing Materials:

1. Concrete curing compound shall conform to the requirements of ASTM C309 Type 1-D (clear or translucent with a fugitive dye), Class B (Resin Type Only), except the loss of water shall not exceed 0.15 kilograms per square meter in 24 hours nor 0.45 kilograms per square meter in 72 hours when tested in accordance with ASTM C 156. The CONTRACTOR shall provide, when requested by the ENGINEER, certified copies of vendor's test report showing compliance with ASTM C 309 and these specifications. The testing and the report shall be supplied without cost to the Agency. All compounds shall be

furnished by the CONTRACTOR in sealed original containers labeled in accordance with ASTM C 309 and with the date of manufacture.

2. Polyethylene sheet for use as concrete curing blanket shall be white and conform to ASTM C 171. The loss of moisture when determined in accordance with the requirements of ASTM C 156 shall not exceed 0.055 grams per square centimeter of surface.

3. Polyethylene-coated burlap for use as concrete curing blanket shall conform to ASTM C 171. The loss of moisture, when determined in accordance with the requirements of ASTM C 156, shall not exceed 0.055 grams per square centimeter of surface.

I. Expansion Joint Filler Material

1. For concrete curbs and flatwork: 3/8" thick fiber expansion joint per W.R. Meadows or equal meeting ASTM D 1751.

2. Silicone Joint Sealant: Premium-grade, high-performance, moisture-cured, single-component, polyurethane-based, non-sag elastomeric sealant. Meets Federal specification TT-S-00230C. Meets ASTM C-920, Type S, Class 25 or 35; Grade NS, Use T or NT, Shore A Hardness (21 day) 35-45. A Certificate of Compliance for the silicone sealant shall be furnished to the Engineer. The Certificate shall also be accompanied with a certified test report of the results of the required tests performed on the sealant material within the previous 12 months prior to proposed use. The Certificate and accompanying test report shall be provided for each lot of silicone joint sealant prior to use on the project.

a. Sika Corporation, Sikaflex-1A.

b. Tremco, Inc., Dymonic.

c. Tremco, Inc., Vulkem 116.

d. Bostik Construction Products Div., Chem-Calk 900.

J. Related Materials: As follows:

1. Damp-proofing agent shall be an asphalt emulsion, such as [Sonneborn Hydrocide 660], [Flintkote C-13-E Foundation Coating], or equal.

2. Epoxy adhesives shall be the following products for the applications specified:

a. For bonding freshly-mixed, plastic concrete to hardened concrete, [Sikadur Hi-Mod Epoxy Adhesive, as manufactured by Sika Chemical Corporation]; [Concresive 1001-LPL, as manufactured by Adhesive Engineering Company]; or equal.

b. For bonding hardened concrete or masonry to steel, [Colma-Dur Gel], [Sikadur Hi-Mod Gel], or equal.

K. Curbs / Curb & Gutter Mix Design: At a minimum, concrete for curbs and curbs & gutters shall conform to the Standard Specifications for Public Works Construction, Section 201-1.1.2, mix class 520-C-2500.

1. Compressive Strength: minimum of 2,500 psi at 28 days compressive strength.

2. Slump Limit: 4 inches at point of placement.

3. Cement per cu yard (sacks): 5.5 (minimum).

4. Air Content: 4% +/- 1% percent.

PART 3 - EXECUTION

3.01 PREPARATION OF SURFACES FOR CONCRETING

A. General: Earth surfaces shall be thoroughly wetted by sprinkling, prior to the placing of any concrete, and these surfaces shall be kept moist by frequent sprinkling up to the time of placing concrete thereon. The surface shall be free from standing water, mud, and debris at the time of placing concrete.

B. Aggregate base material shall be installed in layers not exceeding 4-inches and compacted to a minimum of 95% relative density.

C. Subgrade Preparation:

1. The upper 12-inches of loose soils and fill materials, below the concrete pavement, shall be removed and re-compacted. These materials should be removed and re-compacted to a minimum 90% of maximum compaction.

2. The upper 6-inches of paving subgrade below overexcavation should be scarified, moisture conditioned to two percent above optimum moisture content, and properly compacted to at least 90 percent relative compaction, as determined by ASTM Test Method D 1557 (latest edition).

D. The compacted surface shall be firm, hard and unyielding. The term "firm, hard and unyielding" as used in S.S.P.W.C. Section 301-1.3 shall mean that when the heaviest construction and hauling equipment used on the project drives over the subgrade, no permanent deformation shall occur either before or during pavement construction. On areas where the underlying material appears to be wet or soft, or where it deflects under wheel loads, the Contractor shall employ excavation and work techniques which do not worsen the subgrade condition.

E. The above subgrade preparation recommendations are based on the assumption that soils encountered during field exploration are representative of soils throughout the site. However, there can be unforeseen and unanticipated variations in soils between points of subsurface exploration. For this reason, the actual overexcavation depths will have to be determined on the basis of in-grading observations and testing performed by representatives of the project geotechnical consultant.

F. A California Licensed Surveyor (LS) must provide grade stakes and elevations for the Geotechnical Engineer to verify that any over-excavation depths, shown on the construction drawings for concrete pavement structural sections, have been achieved prior to re-compaction.

G. Joints in Concrete: Concrete surfaces upon or against which concrete is to be placed, where the placement of the old concrete has been stopped or interrupted so that, as determined by the ENGINEER, the new concrete cannot be incorporated integrally with that previously placed, are defined as construction joints. The surfaces of horizontal joints shall be given a compacted, roughened surface for good bond. Except where the Drawings call for joint surfaces to be coated, the joint surfaces shall be cleaned of all laitance, loose or defective concrete, and foreign material. Such cleaning shall be accomplished by sandblasting followed by thorough washing. All pools of water shall be removed from the surface of construction joints before the new concrete is placed.

H. Embedded Items: No concrete shall be placed until all formwork, installation of parts to be embedded, reinforcement steel, and preparation of surfaces involved in the placing have been completed and ACCEPTED by the INSPECTOR at least 24 hours before placement of concrete. All surfaces of forms and embedded items that have become encrusted with dried grout from concrete previously placed shall be cleaned of all such grout before the surrounding or adjacent concrete is placed.

I. All inserts or other embedded items shall conform to the requirements herein.

J. All reinforcement, anchor bolts, sleeves, inserts, and similar items shall be set and secured in the forms where shown or by shop drawings and shall be acceptable to the INSPECTOR before any concrete is placed. Accuracy of placement is the responsibility of the CONTRACTOR.

K. Where concrete is to be cast against old concrete, (greater than 60 days of age), the surface of the old concrete shall be thoroughly cleaned and roughened by sand-blasting, exposing the aggregate. In concrete shear-walls, suspended slabs and roof slabs, the interface surface at construction joints shall be roughened to a full amplitude of one quarter inch. The hardened surface shall be cleaned of all latent foreign material and washed clean, prior to the application of an epoxy bonding agent.

L. No concrete shall be placed in any structure until all water entering the space to be filled with concrete has been properly cut off or has been diverted by pipes, or other means, and carried out of the forms, clear of the work. No concrete shall be deposited underwater nor shall the CONTRACTOR allow still water to rise on any concrete until the concrete has attained its initial set. Water shall not be permitted to flow over the surface of any concrete in such manner and at such velocity as will injure the surface finish of the concrete. Pumping or other necessary dewatering operations for removing ground water, if required, will be subject to the review of the ENGINEER.

M. Corrosion Protection: Pipe, conduit, dowels, and other ferrous items required to be embedded in concrete construction shall be so positioned and supported prior to placement of concrete that there will be a minimum of 2-inches clearance between said items and any part of the concrete reinforcement. Securing such items in position by wiring or welding them to the reinforcement will not be permitted.

N. Openings for pipes, inserts for pipe hangers and brackets, and the setting of anchors shall, where practicable, be provided for during the placing of concrete.

O. Anchor bolts shall be accurately set, and shall be maintained in position by templates while being embedded in concrete.

P. Cleaning: The surfaces of all metalwork to be in contact with concrete shall be thoroughly cleaned of all dirt, grease, loose scale and rust, grout, mortar, and other foreign substances immediately before the concrete is placed.

3.02 HANDLING, TRANSPORTING, AND PLACING

A. General: Placing of concrete shall conform to the applicable requirements of ACI 301 and the requirements of this Section.

B. The total elapsed time between the addition of water at the batch plant and the completion of the discharge of the concrete from the mixer shall not exceed 90 minutes. All concrete remaining in the mixer after said 90-minute time limit shall be rejected and removed from the project site.

C. Non-Conforming Work or Materials: Concrete which upon or before placing is found not to conform to the requirements specified herein shall be rejected and immediately removed from the work. Concrete which is not placed in accordance with these Specifications, or which is of inferior quality, shall be removed and replaced by and at the expense of the CONTRACTOR.

D. Whenever batch trucks or other paving equipment cause rutting of the subgrade or subbase in concrete placement areas, inspectors shall immediately stop construction. Construction shall not be allowed to resume until distorted subgrade or subbase is repaired. Contractors and inspectors should locate by proof rolling, any questionable unstable areas in advance to avoid distortion under equipment. Wet, unstable areas must be dried out or replaced before starting placement of asphalt. Locating wet or soft areas in advance can be accomplished by testing finished subgrade or subbase with a loaded truck. Construction of concrete pavement should not proceed unless testing gives

a reasonable indication that distortions will not occur during construction of overlying pavement. When repair, aeration, and recompaction are required to correct damage from Contractor's operation, all necessary repair will be done at Contractor's expense. However, if the Engineer determines that additional depth of aeration and recompaction are needed, that should be paid by change order.

E. All pull boxes, meter boxes, valve covers and manholes shall be adjusted to proposed finish grade prior to placement of the concrete.

F. Dowel Placement:

1. Dowel bars shall be centered on the joint within a tolerance of ±2 inches in the longitudinal direction directly over the contact joint or sawcut for the transverse weakened plane joints, as shown on the plans. Prior to placement of dowel bars, the Contractor shall submit to the Engineer a written procedure to identify the transverse weakened plane joint locations relative to the middle of the dowel bars and the procedure for consolidating concrete around the dowel bars.

2. Dowel bars shall be placed at longitudinal joints as shown on the plans. Dowel bars shall be placed as shown on the plans by using mechanical insertion. When dowel bars are placed by mechanical insertion, the concrete over the dowel bars shall be reworked and refinished so that there is no evidence on the surface of the completed pavement that there has been any insertion performed. When drill and bonding of dowel bars is performed at contact joints, a grout retention ring shall be used.

G. Concrete shall not be placed until the forms and reinforcement have been inspected, all preparations for the placement have been completed, and the preparations have been checked by the project inspector, all subject to the observation of the engineer or architect.

H. Casting New Concrete Against Old: An approved epoxy adhesive bonding agent shall be applied to the old surfaces according to the manufacturer's written recommendations. This provision shall not apply to joints where waterstop is installed.

I. Conveyor Belts and Chutes: All ends of chutes, hopper gates, and all other points of concrete discharge throughout the CONTRACTOR'S conveying, hoisting and placing system shall be so designed and arranged that concrete passing from them will not fall separated into whatever receptacle immediately receives it. Conveyor belts, if used, shall be of a type acceptable to the INSPECTOR. Chutes longer than 50 feet will not be permitted. Minimum slopes of chutes shall be such that concrete of the specified consistency will readily flow in them. If a conveyor belt is used, it shall be wiped clean by a device operated in such a manner that none of the mortar adhering to the belt will be wasted. All conveyor belts and chutes shall be covered. Sufficient illumination shall be provided in the interior of all forms so that the concrete at the places of deposit is visible from the deck or runway.

J. Placement in Slabs: Concrete placed in sloping slabs shall proceed uniformly from the bottom of the slab to the top, for the full width of the pour. As the work progresses, the concrete shall be vibrated and carefully worked around the slab reinforcement, and the surface of the slab shall be screeded in an up-slope direction.

K. Temperature of Concrete: The temperature of concrete when it is being placed shall be not more than 90 degrees F nor less than 40 degrees F in moderate weather, and not less than 50 degrees F in weather during which the mean daily temperature drops below 40 degrees F. Concrete ingredients shall not be heated to a temperature higher than that necessary to keep the temperature of the mixed concrete, as placed, from falling below the specified minimum temperature. If concrete is placed when the weather is such that the temperature of the concrete would exceed 90 degrees F, the CONTRACTOR shall employ effective means, such as precooling of aggregates and mixing water using ice or placing at night, as necessary to maintain the temperature of the concrete, as it is placed,

below 90 degrees F. The CONTRACTOR shall be entitled to no additional compensation on account of the foregoing requirements.

L. Cold Weather Placement: Earth foundations shall be free from frost or ice when concrete is placed upon or against them. Fly ash concrete shall not be placed when the air temperature falls below 50 degrees F.

M. A transverse construction joint shall be constructed, including dowel bars, at the end of each day's work or where concrete placement is interrupted for more than 30 minutes, to coincide with the next contraction joint location. If sufficient concrete has not been mixed to form a slab to match the next contraction joint, when an interruption occurs, the excess concrete shall be removed and disposed of back to the last preceding joint. The cost of removing and disposing of excess concrete shall be at the Contractor's expense. Excess material shall become the property of the Contractor and shall be disposed of. A metal or wooden bulkhead (header) shall be used to form the joint. The bulkhead shall be designed to accommodate the installation of dowel bars.

N. Broom Finish Type:

1. Surfaces Sloped Less than 6%: Provide a medium salt (medium broom) finish by drawing a soft bristle broom across concrete surface, perpendicular to line of traffic, to provide a uniform fine line texture.

2. Surfaces Sloped greater than 6%: Provide a slip resistant (heavy broom finish) by striating surface 1/16 inch to 1/8 inch deep with a stiff-bristled broom, perpendicular to line of traffic.

O. Joints:

1. Joints: Joints in concrete curb, gutter, and walk shall be designated as expansion joints and control joints. Joints for concrete flatwork shall be provided every eight (8) feet or less. Expansion joints for swales, curbs / curb & gutter shall be placed at no greater than 24 feet on center or as indicated on construction drawings.

a. Expansion Joints: Provide 1/2” premolded joint filler, material meeting Section 2.01I herein. Construct expansion joints in conformance with Standard Specification Section 303-5.4.2 and the details on the construction documents.

1) Extend expansion joint fillers full-width and depth of joint, and 1/4" below finished surface where joint filler is indicated. If no joint sealer is called for, place top of premolded joint filler flush with top of concrete or curb.

2) Where silicone joint sealer is noted on the construction documents, the premolded joint filler strips shall be placed 1” below the surface of the concrete or curb, the full width of the expansion joint. The remainder of all joints shall be filled to within 1/4” below the surface of the concrete with the silicone joint sealant.

3) Provide expansion joint filler strips, with elastomeric sealer, between p.c.c. walk and curb, p.c.c. walk and buildings, & p.c.c. walk and retaining walls and at locations noted on the construction documents. The depth of the filler strip shall be the depth of the p.c.c. walk plus 1 inch with the top set flush with the specified grade of the top of curb or walk.

b. Control Joints:

1) Control joints in site work concrete shall comply with Standard Specification Section 302-6.5.4, except that the configuration of the joint, shall be as indicated on the construction documents.

2) Control joints in concrete curbs, sidewalks and gutters shall comply with Standard Specification Section 303-5.4.3, except that the joint configuration shall be as indicated below.

3) Location: As shown on construction documents, but in any case not more than eight (8) feet O.C. both ways in concrete sidewalks. In swales and gutters, including gutter integral with curb, joints shall be at regular intervals not exceeding five (5) feet. Where integral curb and gutter is adjacent to concrete pavement, the joint shall be aligned with the pavement joints where practical.

P. Protection: In hot, dry, and windy weather protect concrete from rapid moisture loss before and during finishing operations with an evaporation-control film. Apply according to manufacturer's instructions after screeding and bull floating, but before floating.

3.03 TAMPING AND VIBRATING

A. As concrete is placed in the forms or in excavations, it shall be thoroughly settled and compacted, throughout the entire depth of the layer which is being consolidated, into a dense, homogeneous mass, filling all corners and angles, thoroughly embedding the reinforcement, eliminating rock pockets, and bringing only a slight excess of water to the exposed surface of concrete during placement. Vibrators shall be high speed power vibrators (8000 to 10,000 rpm) of an immersion type in sufficient number and with (at least one) standby units as required.

B. Care shall be used in placing concrete around waterstops. The concrete shall be carefully worked by rodding and vibrating to make sure that all air and rock pockets have been eliminated. Where flat-strip type waterstops are placed horizontally, the concrete shall be worked under the waterstops by hand, making sure that all air and rock pockets have been eliminated. Concrete surrounding the waterstops shall be given additional vibration, over and above that used for adjacent concrete placement to assure complete embedment of the waterstops in the concrete.

C. Concrete in walls shall be internally vibrated and at the same time rammed, stirred, or worked with suitable appliances, tamping bars, shovels, or forked tools until it completely fills the forms or excavations and closes snugly against all surfaces. Subsequent layers of concrete shall not be placed until the layers previously placed have been worked thoroughly as specified. Vibrators shall be provided in sufficient numbers, with standby units as required, to accomplish the results herein specified within 15 minutes after concrete of the prescribed consistency is placed in the forms. The vibrating head shall be kept from contact with the surfaces of the forms. Care shall be taken not to vibrate concrete excessively or to work it in any manner that causes segregation of its constituents.

3.04 CURING

A. Comply with 2018 California Building Code, Title 24, Part 2, Volume 2, Section 1905A.11.

1. Begin final curing procedures immediately following initial curing and before concrete has dried. Continue final curing for at least seven (7) days in accordance with ACI 301 procedures. Avoid rapid drying at end of final curing period.

B. Curing Methods: Perform curing of concrete by curing as herein specified.

1. Provide moisture-curing by the following methods:

a. Keep concrete surface continuously wet by covering with water.

b. Continuous water-fog spray.

c. Covering concrete surface with specified absorptive cover, thoroughly saturating cover with water and keeping continuously wet. Place absorptive cover to provide coverage of concrete surfaces and edges, with 4 inch lap over adjacent absorptive covers.

2. Provide curing and sealing compound to exposed exterior slabs, walks, and curbs, as follows:

a. Apply specified curing and sealing compound to concrete slabs as soon as final finishing operations are complete (within 2 hours). Apply uniformly in continuous operation by power-spray or roller in accordance with manufacturer's directions. Re-coat areas subjected to heavy rainfall within 3 hours after initial application. Maintain continuity of coating and repair damage during curing period.

b. Do not use membrane curing compounds on surfaces which are to be covered with coating material applied directly to concrete, liquid, floor hardener, waterproofing, dampproofing, membrane roofing, flooring (such as ceramic or quarry tile, glue-down carpet), painting, and other coatings and finish materials, unless otherwise acceptable to Architect.

C. Concrete slabs and paving shall be properly cured and protected against damage and defacement of nature during construction operations. If weather is hot or surface has dried out, spray surface with fine mist of water starting not later than two hours after final troweling. Surface of finish shall be kept continuously wet for at least ten days. Wetting is considered emergency work and shall be performed on weekends and holidays if necessary.

D. The CONTRACTOR shall protect all concrete against injury or damage from excessive heat, lack of moisture, overstress, or any other cause until final acceptance by the Owner. Particular care shall be taken to prevent the drying of concrete and to avoid roughening or otherwise damaging the surface. Any concrete found to be damaged, or which may have been originally defective, or which becomes defective at any time prior to the final acceptance of the completed work, or which departs from the established line or grade, or which, for any other reason, does not conform to the requirements of the Contract Documents, shall be satisfactorily repaired or removed and replaced with acceptable concrete at the CONTRACTOR'S expense. Exclude traffic from concrete paving for at least 7 days after placement.

E. Maintain concrete paving free of stains, discoloration, dirt, and other foreign material. Sweep concrete paving not more than 2 days prior to date scheduled for Substantial Completion inspections.

3.05 PUMPING OF CONCRETE

A. General: If the pumped concrete does not produce satisfactory end results, the CONTRACTOR shall discontinue the pumping operation and proceed with the placing of concrete using conventional methods.

B. Pumping Equipment: The pumping equipment must have 2 cylinders and be designed to operate with one cylinder only in case the other one is not functioning. In lieu of this requirement, the CONTRACTOR may have a standby pump on the site during pumping.

C. The minimum diameter of the hose (conduits) shall be 4-inches.

D. Pumping equipment and hoses (conduits) that are not functioning properly, shall be replaced.

E. Aluminum conduits for conveying the concrete will not be permitted.

F. Proportioning: Minimum compressive strength, cement content, and maximum size of aggregates shall be as specified herein.

G. Gradation of coarse aggregates shall conform to ASTM C 33 and shall be as close to the middle range as possible.

H. Gradation of fine aggregate shall conform to ASTM C 33, with 15 to 30 percent passing the number 50 screen and 5 to 10 percent passing the number 100 screen. The fineness modulus of sand used shall not be over 3.00.

I. Water and slump requirements shall conform to the requirements of this Section.

J. Cement and admixtures shall conform to the requirements of this Section.

K. Field Control: Concrete samples for slump per ASTM C 143 and test cylinders per ASTM C 31 and C 39.

3.06 TREATMENT OF SURFACE DEFECTS

A. As soon as forms are removed, all exposed surfaces shall be carefully examined and any irregularities shall be immediately rubbed or ground in a satisfactory manner in order to secure a smooth, uniform, and continuous surface. Plastering or coating of surfaces to be smoothed will not be permitted. No repairs shall be made until after inspection by the ENGINEER. In no case will extensive patching of honeycombed concrete be permitted. Concrete containing minor voids, holes, honeycombing, or similar depression defects shall have them repaired as specified herein. Concrete containing extensive voids, holes, honeycombing, or similar depression defects, shall be completely removed and replaced.

1. All repairs and replacements herein specified shall be promptly executed by the CONTRACTOR at its own expense.

B. Defective surfaces to be repaired shall be cut back from trueline a minimum depth of 1/2-inch over the entire area. Feathered edges will not be permitted. Where chipping or cutting tools are not required in order to deepen the area properly, the surface shall be prepared for bonding by the removal of all laitance or soft material, and not less than 1/32-inch depth of the surface film from all hard portions, by means of an efficient sandblast. After cutting and sandblasting, the surface shall be wetted sufficiently in advance of shooting with shotcrete or with cement mortar so that while the repair material is being applied, the surfaces under repair will remain moist, but not so wet as to overcome the suction upon which a good bond depends. The material used for repair purposes shall consist of a mixture of one sack of cement to 3 cubic feet of sand. For exposed walls, the cement shall contain such a proportion of Atlas white portland cement as is required to make the color of the patch match the color of the surrounding concrete.

C. Holes left by tie-rod cones shall be reamed so as to leave the surfaces of the holes clean and rough. These holes then shall be repaired in an approved manner with non-shrink grout. Holes left by form-tying devices having a rectangular cross-section, and other imperfections having a depth greater than their least surface dimension, shall not be reamed but shall be repaired in an approved manner with non-shrink grout.

D. All repairs shall be built up and shaped in such a manner that the completed work will conform to the requirements of this Section, as applicable, using approved methods which will not disturb the bond, cause sagging, or cause horizontal fractures. Surfaces of said repairs shall receive the same kind and amount of curing treatment as required for the concrete in the repaired section.

E. Prior to filling any structure with water, all cracks that may have developed shall be repaired to the satisfaction of the ENGINEER. This repair method shall be done on the water bearing face of members. Prior to backfilling, faces of members in contact with fill,

which are not covered with a waterproofing membrane, shall also have cracks repaired as specified herein.

F. The finished surface shall be free from humps, sags, blemishes or other irregularities.

3.07 FIELD QUALITY CONTROL

A. Correction of Mix Design for Failed Concrete Tests: If the compressive cylinder strength test for in place PCC yields test results below the specified 28-day PCC compressive strength and the Engineer determines a corrective change is necessary, the Contractor shall, at its own expense, make corrective changes in the mix proportions. The Engineer shall approve the changes in the mix proportions or PCC placement procedures, before any additional PCC is placed on the job.

B. Flood Tests: Before final acceptance, and after concrete has thoroughly cured, all concrete pavement, including swales and curb & gutter, shall be water tested to ensure proper drainage as directed by the Inspector. The Contractor shall provide water for this purpose. The flooding shall be done by water tank truck. Concrete work where water ponds and does not run off in a reasonable amount of time (1-hour), shall be removed to the nearest score or joint line and replaced to provide proper drainage. Full compensation for complying with this requirement shall be considered as included in the Contract Unit Price for cement concrete pavement.

3.08 OFF-SITE CONCRETE WORK

A. Concrete driveway aprons, street sidewalks, curbs and gutters, etc., indicated to be constructed outside of property lines shall conform to the standards and specifications of the public agency having jurisdiction and shall be subject to inspection by its representative. The CONTRACTOR shall obtain and pay for necessary permits and inspection fees. The Owner shall reimburse the Contractor for said permits and all necessary inspection fees.

3.09 CARE AND REPAIR OF CONCRETE

A. General: The CONTRACTOR shall protect all concrete against injury or damage from excessive heat, lack of moisture, overstress, or any other cause until final acceptance by the Owner. Particular care shall be taken to prevent the drying of concrete and to avoid roughening or otherwise damaging the surface. Any concrete found to be damaged, or which may have been originally defective, or which becomes defective at any time prior to the final acceptance of the completed work, or which departs from the established line or grade, or which, for any other reason, does not conform to the requirements of the Contract Documents, shall be satisfactorily repaired or removed and replaced with acceptable concrete at the CONTRACTOR'S expense.

B. The contractor shall barricade and protect placed Portland Cement Concrete from all damage, marks, mars and/or graffiti. Any Portland Cement Concrete damaged, defaced, discolored or defective shall be replaced at the contractor’s expense.

END OF SECTION

SECTION 32 1723

PAVEMENT MARKINGS

PART 1 - GENERAL

1.01 REFERENCE:

A. Requirements in Addenda, Alternates, Conditions, and Division 1 collectively apply to this work.

B. Related Sections:

1. Section 02711: Bituminous Surfacing.

2. Section 02786: Seal for Bituminous Surfacing.

1.02 DESCRIPTION:

A. Principal Work Items Are:

1. Painted lines, lettering, and symbols at parking areas.

2. Painted stripes at exterior stairs.

3. Fire Lane “No Parking”.

4. Curb marking and red curbs.

1.03 JOB CONDITIONS:

A. Proceed with pavement marking only on clean, dry surfaces and at a minimum ambient or surface temperature of 40 deg F for oil-based materials, 50 deg F for water-based materials, and not exceeding 95 deg F.

B. Sequencing, Scheduling: Coordinate with paving work. Verify that paint type is compatible with asphalt paving surfaces seal coats.

C. Protection: Do not apply pavement markings for seven days after application of asphalt surface seal coat. After application, protect from traffic until thoroughly dry.

PART 2 - PRODUCTS

2.01 MATERIALS:

A. Traffic Paint:

1. Type: Water base, roadway traffic lane marking type; colors as selected.

2. Acceptable Manufacturers:

a. Dunn-Edwards, Vin-L-Stripe No. W-801, vinyl-epoxy as a standard of quality.

b. J. E. Bauer latex base Formula No. 1030A9 White, No. 1056A9 Yellow, No. 1865A9 Blue, No. 1118A9 Green, and No. 1854A9 Red.

c. Sinclair No. 160 Vinyl Traffic Line Paint, water base.

d. Pervo Paint Company.

PART 3 - EXECUTION

3.01 PREPARATION:

A. Layout: Accurately measure and layout work. Use stencils for all work; snap lines for straight work.

B. Prior to application of paint, allow the pavement to properly cure. Clean and prepare in accordance with paint manufacturer's written recommendations.

C. Provide mechanical equipment to install paint in a uniform, straight or curved pattern, without holidays and other defects.

D. Do not permit traffic until paint has completely cured.

E. Provide two installations/applications of pavement marking; once for initial use and once after final seal coat.

F. Install 2 coats in thickness recommended by manufacturer.

3.02 APPLICATION:

A. Painted Lines, Lettering, and Symbols At Parking Areas:

1. Parking Stall Lines: 4 inches wide, color white.

2. Wheelchair accessible parking stalls, stripes and letters: As indicated. Loading and unloading access aisles shall be marked by a 4” wide border painted blue. Within the blue border, hatched lines a maximum of 36” on center shall be painted white. CBC Figures 11B-18A through 11B-18C.

3. Color: White, for all work except blue at wheelchair accessible parking stalls borders and red at Fire Lanes.

4. Specific areas designated as fire lanes must be marked with red curbs using OSHA safety red paint. “FIRE LANE – NO PARKING” shall be painted on the top of curb in 3” white lettering at a spacing of 30’ on center or portion thereof.

5. Painted lines and markings on pavement at wheelchair accessible parking stalls shall be 4 inches wide (blue in color) equal of Color No. 15090 per Federal Standard 595B.

6. Detectable warnings surfaces shall comply with CBC Section 11B-705.1.

7. Detectable warning surfaces shall be yellow conforming to FS 33538 of Federal Standard 595B, except for locations at curb ramps, islands, or cut-through medians where color used shall contract visually with that of adjacent walking surfaces, either light-on-dark, or dark-on-light. CBC Sections 11B-705.1.1.3 and 11B-705.1.1.5.

B. Stripes At Exterior Stairs:

1. Stripes: 2" wide, located 2" from, and parallel to, nosing.

2. Required Locations: All treads, all top landings, all intermediate landings.

END OF SECTION

SECTION 32 3113

CHAIN LINK FENCES AND GATES

PART 1 – GENERAL

1.01 SUMMARY

1.02

A. Provisions of the General and Supplementary Conditions and Division 01 apply to this section.

B. Section Includes:

1. Chain link fences and gates as indicated.

C. Related Sections:

1. Section 01500: Construction Facilities and Temporary Controls.
2. Section 02315: Excavating, Backfilling and Compacting.
3. Section 02765: Pavement Repair.
4. Section 02770: Site Concrete Work.

1.03 SUBMITTALS

A. Shop Drawings:

1. Submit plans and details indicating extent of fences, locations of gates, hardware support and details of attachment and footings. Indicate means and methods for surface preparation and finishing. Submit full selection of manufacturer's standard PVC coating colors for selection by the Owner.

2. Submittals for all material proposed for use shall be per Section 01300.

1.04 QUALITY ASSURANCE

A. Regulatory Requirements:

1. Comply with Standard Specifications for Public Works Construction, current edition, and conform to CLFMI Product Manual.

2. Accessibility Requirements
   a. Gates that are part of the accessible route shall meet all the requirements of an accessible door in compliance with **CBC Section 11B-404**.

   b. The lever of lever actuated latches or locks for an accessible gate shall be curved with a return to within ½" of the (face of) gate to prevent catching on the clothing or persons**. California Referenced Standards code. T-24 Part 12, Section 12-10-202, Item (F).**

   c. Swing doors and gate surfaces within 10" of the finish floor or ground shall have a smooth surface on the push side extending the full width of the door or gate. Parts creating horizontal or vertical joints in these surfaces shall be within 1/16" of the same plane as the other and be free of sharp or abrasive edges. Cavities created by added kick plates shall be capped. (**CBC Section 11B-404.2.10)**.

B. Warranty: Submit unconditional 2-year installation warranty. Warranty commences on

recordation date of the Notice of Completion.

C. A site review with designated District representative prior to expiration of warranty is required as a condition to end installation warranty period.

PART 2 – PRODUCTS

2.01 MATERIALS

A. Concrete: Class 500-C-2500 concrete furnished as prescribed in Section 201-1 "Concrete, Mortar and Related Materials" of the Standard Specifications for Public Works Construction or may be provided in the following volumetric proportions:

Portland Cement	1 part
Fine Aggregate	2 parts
Coarse Aggregate (1 inch)	4 parts
Water	7-1/2 gallons, maximum per sack of cement
Slump	3-inch

B. Chain Link Fence Fabric: Conforming to ASTM A 392, Class C2 zinc coating, 2.00 ounces minimum per square foot of wire surface, hot-dipped galvanized after weaving, and top and bottom edges knuckled, PVC coated to net the requirements of ASTM F668.

1. Fabric for perimeter fencing and interior fencing shall be 9 gauge woven wire with 2 inch mesh, unless otherwise specified.

2. Fabric for fencing on top of enclosure shall be 9 gauge wire minimum with 1 inch mesh.

3. Fabric at gates, where noted on the drawings shall be 1 inch mesh.
4. Installed fence fabric shall be free from barbs, icicles, or other projecttions and installed fence fabric with such defects will be deemed defective Work.

C. Posts, Top Rails, Brace Rails and Gate Frames: Standard weight, galvanized, welded or seamless steel pipe conforming to ASTM A 53, with a minimum yield strength of 35,000 psi

D. Schedule of Posts and Footings:

Item	Height	Nominal Pip Size (inches)	Outside Diameter (inches)	Weight (pounds per foot)	Diameter (inches)	Depth (inches)
Top Rail, Brace Rails and Transom Rails	Up to 10’-0”	1-1/4	1.660	2.27	N/A	N/A
	10’-1” to 16’-0”	1-1/2	1.900	2.72	N/A	N/A
Line Posts	Up to 6’-0”	2	2.375	2.65	16	36
	6’-1” to 8’-0”	2	2.375	2.65	24	36
	8’-1” to 10’-0”	2-1/2	2.875	5.79	18	48
	10’-1” to 16’-0”	3	3.5	7.58	24	56
Terminal, Corner, Angle & Pull Posts	Up to 8’-0”	2-1/2	2.875	5.79	16	36
	8’-0” to 10’-0”	2-1/2	2.875	5.79	18	48
	10’-1” to 16’-0”	3	3.5	7.58	24	56
Pedestrian Gate Posts	Up to 8’-0”	2-1/2	2.875	5.79	24	36
Gate Frames	Up to 8’-0”	1-1/2	1.900	2.72	N/A	N/A

Driveway Double-Leaf Swing Gate Posts: Opening						
Up to 17'-3-1/2"	Up to 8'-0"	3-1/2	4	9.11	24	56
17'-4" to 20'-3-1/2"	Up to 8'-0"	3-1/2	4	9.11	24	56

* Embed posts into footing 6 inches less than the depth of the footing. Deviations from footing schedule will require soil test and Architect review.

E. Post Caps: Malleable iron, ASTM A 47, Grade 32510, designed to fit snugly over posts with a minimum projection of 1-1/2 inches below top of posts. Post caps shall be manufactured with a curved top.

F. Eye Tops: Malleable iron, ASTM A 47, Grade 32510, designed to fit over line posts, and for through passage of top rail.

G. Expansion Sleeve Couplings for Top Rails: Steel, 6 inches long, designed to fit tightly on inside of rail, fitted with raised center.

H. Rail Ends for Top Rails and Brace Rails: Malleable iron, ASTM A 47, Grade 32510, with holes to receive 3/8 inch bolts for securing to rail end bands.

I. Tension Bands and Bands for Securing Rail Ends: Mild steel flats, at least 1/8 inch x one inch, except tension bands in gates shall be 1/8 inch x 3/4 inch. Bolts for use with tension bands and rail end bands shall be 3/8 inch x 1-1/2 inches.

J. Tension Bars: Mild steel flats at least 3/16 inch x 3/4 inch.

K. Tension Wire for Installation at Bottom of Fabric: 6 gauge steel wire, conforming to requirements of AISI Steel Products Manual, Carbon Steel Wire, Section 16, merchant quality, galvanized, soft temper with Type I coating.

L. Turnbuckles for installation with Tension Wires: Eye and eye type, drop forged steel, right and left hand threads, at least 3/8 inch screw diameter with at least 4-1/2 inches of take-up.

M. Tie Wire: Aluminum ties 6 gauge for fastening fabric to posts, top rails and brace rails. At bottom tension wire 9 gauge galvanized hog rings shall be installed.

N. Finish of Metal Parts: Post caps, couplings, rail ends, tension bands, tension bars, turnbuckles, rivets, bolts, and other metal parts and fittings shall be hot-dipped galvanized after fabrication. Galvanizing shall conform to ASTM A 569, 0.15 percent maximum, and ASTM A 47.

O. Privacy Slats: When noted on the drawings.

P. Galvanized steel welded wire panels: Six gauge wire as manufactured by Ametco, Deacero or approved equal.

Q. Horizontal support for panic hardware: 1-1/2" X 6" X 14 galvanized steel tube shaped to fit gate frame tube welded and ground smooth.

R. 10" smooth plate for gate bottoms.

PART 3 – EXECUTION

3.01 INSTALLATION

A. Install fences to heights indicated on Drawings.

B. Space fence posts at equal intervals between terminal, angle, corner, and gate posts, and not more than 10 feet apart measured from center to center of posts. In curved fence sections having a radius of 50 feet or less, space posts not more than 5 feet - 6 inches apart. Install posts so that top of eye of post caps are level with top of fabric. All posts to be set in 24" deep, 12" diameter footings. Top of footings to be 2" above grade and sloped for water run-off.

C. Install angle or corner posts at each change in direction of 15 degrees or more, at change of 5 percent or more in grade of fencing, and at the beginning and end of curved fence sections.

D. Install terminal posts at ends of runs of fencing. Install gateposts on both sides of driveway and pedestrian gates. For double-leaf gates, net opening between gate posts shall be gate size as indicated on Drawings, plus 3-1/2 inches; for single leaf gates, net opening shall be gate size plus 2-1/2 inches.

E. Where a fence is to be installed on a curb, construct footings with top of footing level with the lower finish grade. Align posts, set plumb and true before placing footings. Remove splattered concrete from exposed pipe surfaces while concrete is still soft. In bituminous surfaced areas, install seal coat on top of concrete footings.

F. Install fences with top rail. Top rail shall pass through eye tops and be secured at ends with rail end fittings and bands. Splice with 6" long rail sleeves. Top rails shall be continuous, using 18" minimum lengths, except at corner and gate posts.

G. Install fences over 10 feet in height, in addition to top rail, with a horizontal mid-rail set at mid-height of fence.

H. In fences higher than 10 feet, install brace rails at angles, corners, and terminals at 1/4 and 3/4 of fence height. Provide one horizontal brace rail in panels adjacent to terminal, angle, corner, and gateposts, install at mid-height of fence and rigidly secured to posts with rail end fittings and bands. Provide horizontal brace rails, as specified, in panels of curved sections having a radius of 50 feet or less. Brace rails are not required in fencing 4 feet or less in height.

I. Provide a transom rail and fabric at top of pedestrian gate openings. Install transom rail 6 feet - 8 inches above high point of grade at gate opening. Ends of transom rails shall be pinned or riveted to rail end fittings with 1/4 inch mild steel rivets. Pin or rivet must go through rail and peen. Welding on rail ends is not permitted.

J. Install bottom tension wire a minimum of 3 inches from grade for fencing, and provide a turnbuckle for each 150 feet of wire or fractional part thereof. Turnbuckles are not required in runs of 25 feet or less. Install ends of tension wires to posts in a manner to prevent slipping or loss of tension. Turn end of wire around post twisted at least 3 times around wire. At turnbuckles, wire through eye and twist end at least 3 times around wire. Cut tail of bottom wire flush.

K. Install fence fabric on outward facing side of posts. Install fence fabric with top edge projecting above top rail of fence. Stretch fabric between terminal posts or at intervals of 100' maximum, whichever is less.

L. Install bottom of fence fabric 2" above finish grades. Locally shape and trench ground surfaces where necessary to provide uniform top and bottom alignment of fence.

M. Tightly stretch fabric and at terminal, pull corner, angle, and gateposts, secure with tension bars extending full height of fence. Secure tension bars to posts with bolted tension bands spaced not more than 14 inches apart.

N. Bands and Ties: Install bands and ties in accordance with following schedule:

15 bands on 16 feet fence 16 ties on 16 feet fence
11 bands on 12 feet fence 12 ties on 12 feet fence
7 bands on 8 feet fence 7 ties on 8 feet fence
6 bands on 6 feet fence 6 ties on 6 feet fence
4 bands on 4 feet fence 4 ties on 4 feet fence

O. Fasten fabric to line posts with wire ties spaced not more than 16 inches apart. Where 6 gauge aluminum ties are furnished, hook the tie at both ends. Installation of hooked ties with links is not permitted.

P. Fasten fabric to top rails, mid-rails, brace rails, with wire ties spaced not more than 15 inches apart. Bend back ends of tie wires so as not to be a hazard. At bottom tension wire, install hog rings spaced not more than 15 inches apart. Where 2 fabrics are furnished, lap the fabrics one mesh at mid-rail and tie both fabrics with 9 gauge wire or 6 gauge aluminum ties to mid-rails.

Q. Field welds shall be cleaned of flux and spatter, damaged galvanizing removed, burrs and projections ground off, properly prepared, then heavily coated with “Galviz” or "Galvabar,” or equal. Install coating in accordance with written recommendations of manufacturer.

R. Fabrication of Gates:

1. Frames: Fabricate gate frames from steel pipe of size specified, with joints at corners miter cut and continuously welded to sides.

2. Fabric: Gate Fabric to match Fence fabric. Install fence fabric to side members with tension bars and tension bands as specified, spaced not more than 14 inches apart. Tension bars shall extend full height of gate. Install fence fabric to top and bottom members and to brace rail with wire ties as specified for top rails, spaced not more than 12 inches apart.

3. Latches: Galvanized steel plate welded to gate post aligned to provide hardware support for exit hardware rim strike. Coordinate installation of hardware rim strike with hardware contractor. Welding shall be performed before gate frames are galvanized, or welds shall be finished as specified for field welds.

4. Hinges: Three 180 degree hinges per leaf. Install and adjust hinges; burr or center punch threads of gate hinge bolts to prevent removal of nuts. Install 3 hinges on each post for swing gates more than 16 feet wide.

5. Grind welds flush and smooth. Hot-dip galvanize fabricated parts after welding, or finish weld as specified for field welds.

6. Kick plate: Steel plate min 10” high at base of gate. Smooth finish.

3.02 FENCING ADJUSTMENTS

A. Where the finish grade is raised 6 inches or less, cut and re-knuckle the existing fence fabric. Adjust tension wire and tie to fabric. Bottom of fence fabric shall be installed 2” above finish grade.

B. Where the finish pavement is lowered 6 inches or less, demolish the fence footing flush with the

finish grade and adjust the fabric and its attachments. Bottom of fence fabric shall be installed 2” above finish grade.

B. Post footings and fabrics that require readjustment after installation shall be entirely replaced.

3.03 INSTALLATION OF GATES

A. Provide gates of the sizes indicated on Drawings. Allow clearance on gates of 1-1/2 inches at bottom and one inch at top. Construct gates installed in sloping areas to conform to the grade. Coordinate installation of panic hardware with hardware contractor. Ensure proper and smooth operation of hardware and gate. There will be no manually operated cane bolts on gates with panic hardware. Gates in path of travel must comply with door requirements.

B. Brace each gate and corner post to adjacent line post with horizontal center brace rail and diagonal truss rods. Install brace rail, one bay each side from end and gate post.

3.04 COMPLETION

A. Completed fencing shall form continuous units between points indicated with required parts, accessories, and fittings provided and installed. Clean exposed metal surfaces of cement, grout and other foreign substances.

B. Fill in holes left by removal of existing fence footings, except in areas where grading Work is indicated or specified, to existing grade with clean earth thoroughly compacted to at least same density as adjoining soil.

3.05 PROTECTION

A. Protect the Work of this section until Substantial Completion.

3.06 CLEANUP

A. Remove rubbish, debris and waste materials and legally dispose of off the Project site.

END OF SECTION

Downey Unified School District
Downey • California • 90241

Paving Project At:

Carpenter Elementary School

1. CHANGES TO THE APPROVED DRAWINGS AND SPECIFICATIONS SHALL BE MADE BY ADDENDA OR A CHANGE ORDER APPROVED BY THE SCHOOL DISTRICT.
2. SHOULD THE CONTRACTOR HAVE A QUESTION OR NEED FOR CLARIFICATION ABOUT SCOPE RELATED TO SCOPE, A FORMAL REQUEST FOR INFORMATION (RFI) WILL NEED TO BE SUBMITTED STATING SIGNIFICANT INFORMATION SUCH AS THE AREA OF SCOPE WITH REFERENCE PHOTOS AND COMPLETE QUESTION(S) / REMARKS OF THE AREA.
3. THE CONTRACTOR SHALL VERIFY THE LOCATION AND QUANTITY OF EXISTING SURFACE STRUCTURES AND SHALL BE SOLELY RESPONSIBLE FOR ANY UNIDENTIFIED UTILITIES, IMPROVEMENTS, TREES, ETC. TO BE DEMOLISHED AND REMOVED WITHIN THE DEMOLITION LIMIT LINE, INCLUDING APPURTENANT FOUNDATIONS OR SUPPORTS.
4. BEFORE EARTHWORK IS STARTED, THE CONTRACTOR SHALL VERIFY THE LOCATION OF UNDERGROUND UTILITIES SHALL BE CAREFULLY VERIFIED BY HAND METHODS, UTILITIES TO BE LEFT IN PLACE AND SHALL BE PROTECTED FROM DAMAGE UNLESS OTHERWISE NOTED. LOCATIONS SHOWN ON THE PLANS ARE APPROXIMATE AND ARE SHOWN FROM GENERAL INFORMATION ONLY.
5. CONTRACTOR SHALL EXERCISE EXTREME CAUTION IN EXCAVATING AND TRENCHING ON SITE TO AVOID EXISTING DUCTS, DRAINAGE LINES, PIPING, OR CONDUITS, ETC., AND TO PREVENT HAZARD TO PERSONNEL AND/OR DAMAGE TO EXISTING UNDERGROUND UTILITIES OR STRUCTURES WHETHER OR NOT SHOWN AND/OR INSTALLED BY OTHER CONTRACTS. THE ARCHITECT, ENGINEER AND SCHOOL DISTRICT ARE NOT RESPONSIBLE FOR THE LOCATION OR THE EXISTENCE OF UNDERGROUND UTILITIES AND STRUCTURES WHETHER OR NOT SHOWN AND/OR INSTALLED BY OTHER CONTRACTS. THE CONTRACTOR SHALL IMMEDIATELY NOTIFY THE ARCHITECT, ENGINEER AND OR SCHOOL DISTRICT SHOULD SUCH UNIDENTIFIED CONDITIONS BE DISCOVERED. THESE DRAWINGS AND SPECIFICATION DO NOT INCLUDE NECESSARY COMPONENTS FOR CONSTRUCTION AND SAFETY.
6. THE CONTRACTOR SHALL BACKFILL SOIL IN THE EXCAVATED TREE ROOT PITS AND THE TRENCHES FOR REMOVED EXISTING UNDERGROUND STRUCTURES, UTILITIES AND IMPROVEMENTS.
7. THE CONTRACTOR SHALL NOT ABANDON-IN-PLACE ANY EXISTING UNDERGROUND STRUCTURE, UTILITY, OR IMPROVEMENT SO DESIGNATED FOR REMOVAL IN THE PROJECT PLANS UNLESS DIRECTED TO BY THE OWNER.
8. CONTRACTOR TO SAWCUT ALL EXISTING A.C. AND CONCRETE PAVEMENT AT DEMOLITION LIMIT LINE. CONTRACTOR SHALL REMOVE SIDEWALK TO THE NEAREST JOINT.
9. THE CONTRACTOR SHALL WALK THE SITE PRIOR TO BIDDING, TO DETERMINE THE TRUE EXTENT OF REMOVAL WORK REQUIRED. THE CONTRACTOR SHALL VERIFY ALL DIMENSIONS AND CONDITIONS BEFORE BIDDING ON THE JOB.

GENERAL NOTES | 4

1. IT IS THE CONTRACTOR'S RESPONSIBILITY TO LOCATE AND PROTECT FROM DAMAGE ALL UTILITIES AND SUBSTRUCTURES WITHIN THE LIMITS OF NEW WORK WHETHER SHOWN OR NOT ON THE PLAN. THE CONTRACTOR WILL BE HELD RESPONSIBLE AND SHALL BEAR THE TOTAL EXPENSE OF REPAIR OR REPLACEMENT OF SAID UTILITIES AND SUBSTRUCTURES DAMAGED BY HIS OPERATION IN CONNECTION WITH EXECUTION OF THIS WORK. THE CONTRACTOR SHALL ALSO BE RESPONSIBLE FOR ALL DAMAGES TO SAID UTILITIES AND SUBSTRUCTURES AS STATED ON THESE GENERAL NOTES.
2. PRIOR TO COMMENCING WORK, THE CONTRACTOR SHALL WALK THE AREAS WITH THE INSPECTOR AND DOCUMENT A LIST OF ANY EXISTING DAMAGES TO EXISTING IMPROVEMENTS. ANY DAMAGES LATER DISCOVERED THAT ARE NOT ON THIS LIST WILL BE ASSUMED TO HAVE BEEN DONE BY THE CONTRACTOR. THE CONTRACTOR SHALL BE HELD RESPONSIBLE AND BEAR THE EXPENSE FOR REPAIR OF ALL DAMAGES TO EXISTING IMPROVEMENTS.
3. A NON-TOXIC NON-FLAMMABLE WEED AND GRASS KILLER SHALL BE APPLIED TO ALL GROUND AREAS BELOW NEW PAVING. THE WEED KILLER SHALL BE APPLIED AT A RATE WHICH GUARANTEES NO WEED, GRASS, PLANT, MUSHROOM, OR OTHER GROWTH TO OCCUR FOR A PERIOD OF ONE YEAR FROM DATE OF APPLICATION.
4. IN NO CASE SHALL WORKING DIMENSIONS BE SCALED FROM PLANS, SECTIONS, OR DETAILS ON THE WORKING DRAWINGS.
5. FLAT SITE CONCRETE SHALL HAVE A COMPRESSIVE STRENGTH OF 3,500 P.S.I. @ 28 DAYS 4" MAXIMUM SLUMP, REINFORCING STEEL FOR CONCRETE SHALL BE GRADE 40 FOR ALL CONCRETE WALKS. INSTALL #4 @ 18" O.C. EACH WAY UNLESS OTHERWISE NOTED.
6. BURNING OF MATERIALS AND/OR USE OF EXPLOSIVES ARE NOT PERMITTED ON-SITE.
7. CONTRACTOR TO CEASE OPERATIONS AND NOTIFY THE DISTRICT IMMEDIATELY IF SURROUNDING STRUCTURES APPEAR TO BE ENDANGERED. DO NOT RESUME OPERATIONS UNTIL CORRECTIVE MEASURES HAVE BEEN TAKEN.
8. IF CONTAMINATED OR VERMIN INFECTED MATERIALS ARE ENCOUNTERED, CONTACT THE DISTRICT IMMEDIATELY AND WAIT FOR DIRECTIONS. DO NOT DISPOSE OF HAZARDOUS MATERIALS WITHOUT FURTHER DIRECTIONS FROM THE OWNER.
9. CONTRACTOR SHALL REPLACE AND PATCH ALL EXISTING SURFACES DAMAGED OR AFFECTED OUTSIDE THE DEMOLITION LIMIT LINE THAT ARE DAMAGED / AFFECTED DURING THIS CONSTRUCTION CONTRACT TO MATCH EXISTING, INCLUDING PERMANENT TRENCH RESURFACING.

GENERAL NOTES | 3

VICINITY MAP | 2

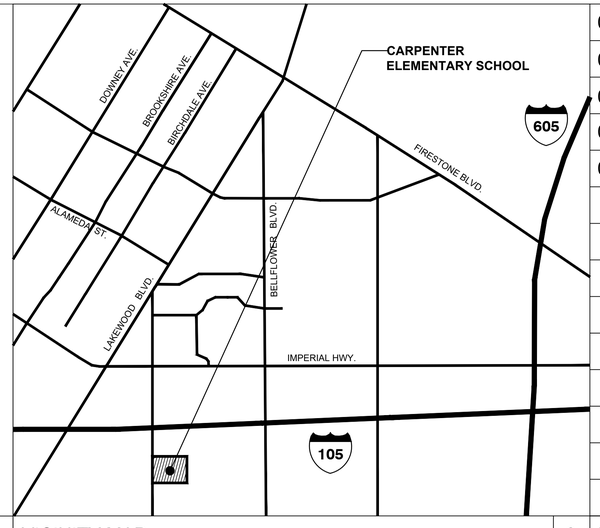

SHEET INDEX | 1

01	T-00	TITLE SHEET
02	A-01	SITE PLAN
03	A-02	STRIPING PLAN
04	A-03	ASPHALT DETAILS
05	A-04	PARKING DETAILS

Downey Unified School District
11627 Brookshire Ave,
Downey • CA • 90241
562.469.6500

The Drawings, Specifications and other documents prepared by DUSD for this project are for use on the project only and may not be used (1) on any other projects, (2) for additions to this project, or (3) for the completion of this project by others, unless otherwise expressly agreed by DUSD in writing. The Drawings, Specifications and other documents prepared by DUSD for this project are exclusive property of DUSD and may not be used, duplicated, copied, transferred, assigned, sold, or hypothecated without the express written permission of DUSD. DUSD retains all common law, statutory, and other legal rights, including copyright, in and to the Drawings, Specifications and other documents prepared by DUSD.

This and all other project documents and all ideas, aesthetics and designs incorporated therein are registered property of DUSD and cannot be lawfully used in whole or in part for any project or purpose except as described in the contractual agreement between DUSD and Client. DUSD hereby gives formal notice that any such project documents use, reproduction or modification (misuse) is not only unlawful but automatically binds all parties involved with misuse to fully indemnify and defend DUSD and DUSD's Consultants to the maximum legal extent against all losses, demands, claims or liabilities arising directly or indirectly from project document misuse.

Project documents described design intent or work and are not a representation of as-built or existing conditions. DUSD makes no representations concerning the accuracy or documents and are not responsible for any descrepancies between project documents and the existing conditions.

Carpenter Elementary School
9439 Foster Rd, • Downey, CA • 90242
Paving Project

Project No.:
Date:
Scale:

TITLE SHEET

T-00

C:\Civil Projects\Paving Projects\Carpenter\Carpenter_Exhibit Plans\Sheets\Carpenter CVR - Elementary Paving - Cover Page.dwg

PRINTED DATE: February 4, 2022

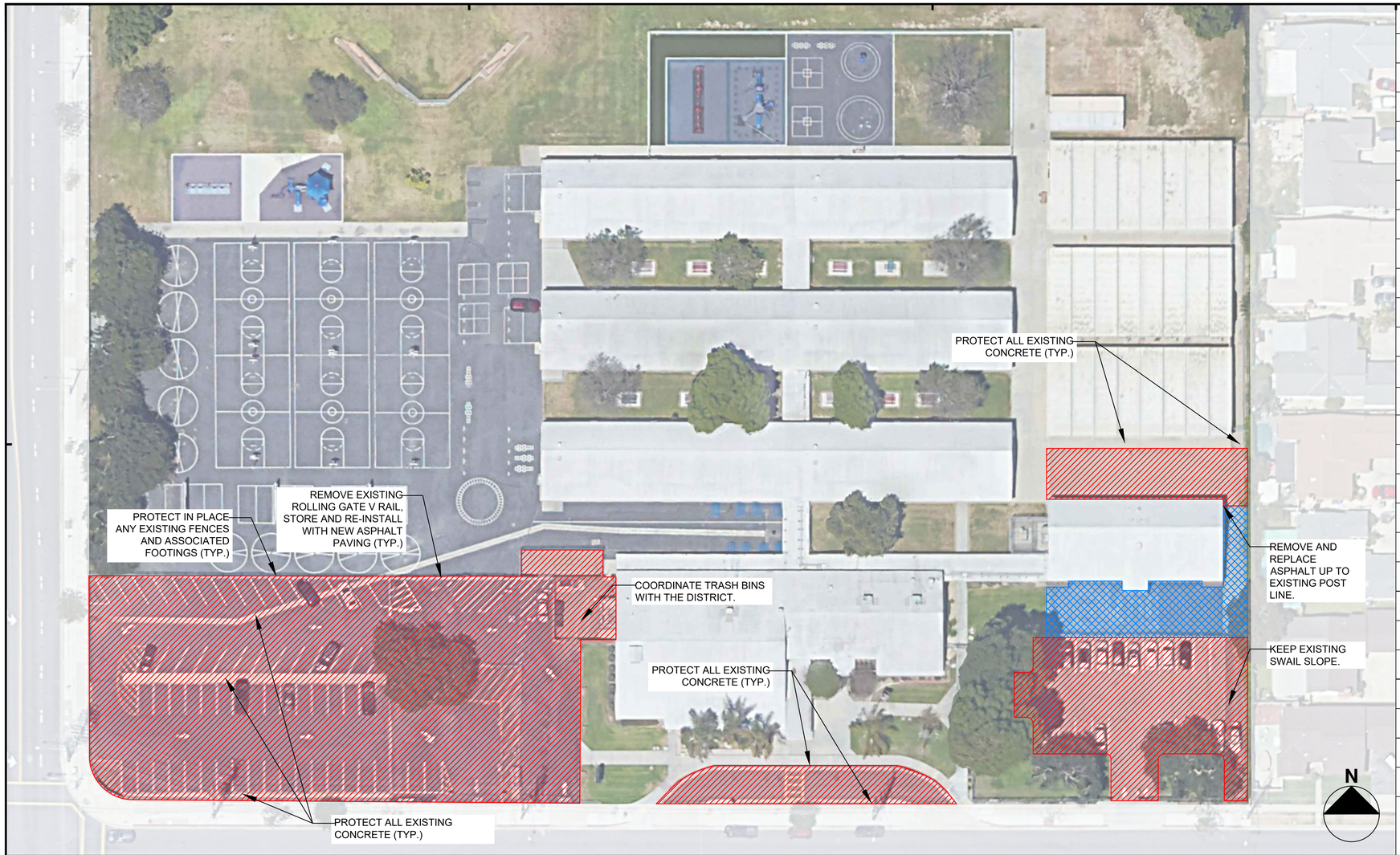

CARPENTER ELEMENTARY SCHOOL - SITE PLAN | 3

1	PROTECT IN PLACE ALL CONCRETE UTILITY LIDS ON THE GROUND, EXISTING VAULTS AND HAND HOLES.
2	PROTECT IN PLACE ALL EXISTING ROOF DOWN SPOUTS.
3	REMOVE, STORE AND REINSTALL ANY EXISTING BENCHES AND LUNCH TABLES.
4	PROTECT IN PLACE ANY EXISTING FENCES AND UTILITY CONDUITS.
5	PROTECT ALL EXISTING CONCRETE, CONCRETE SIDEWALKS AND CONCRETE DRAINAGE SWALES WITHIN THE AREA OF WORK.
6	INSTALL NEW RED WOOD HEADERS ALL AROUND THE NEW ASPHALT AREAS.
7	INSTALL NEW CONCRETE WHEEL STOPS AT THE AREAS WHERE NEW ASPHALT PAVING OCCURS.
8	REPLACE ANY DAMAGED CONCRETE WHEEL STOPS AT AREAS WHERE NEW ASPHALT OR SLURRY OCCURS.
9	REPAINT / RE-STRIPE ALL PARKING LOT LINES AND OR CURBS AFFECTED INCLUDING ANY ADA PARKING. MATCH EXISTING.
10	REMOVE, STORE AND RE-INSTALL ANY BOLLARDS.
11	TEMPORARILY MOVE ANY TRASH BIN CONTAINERS OUT OF THE WAY IF SCOPE IS IN THAT AREA.
12	REPLACE ANY LANDSCAPE AREA THAT IS DAMAGED DUE TO CONSTRUCTION ACTIVITY.
13	PROTECT ALL EXISTING POLES, HANDRAILS AND ASSOCIATED FOOTINGS. IF REPLACING ASPHALT AROUND THEM, REMOVE ASPHALT BY HAND TO PROTECT FOOTINGS.
14	REMOVE DEMOLISHED MATERIALS FROM SITE AS WORK PROGRESSES. LEAVE SITE IN CLEAN CONDITION.
15	COMPLY WITH ANSI A10.6 "SAFETY CONDITIONS FOR DEMOLITION" PUBLISHED BY THE AMERICAN NATIONAL STANDARDS INSTITUTE.
16	CONDUCT DEMOLITION TO MINIMIZE INTERFERENCE WITH SURROUNDING AREAS.
17	INSTALL A SECURITY FENCE SURROUNDING PROJECT SITE AS NEEDED. COORDINATE WITH THE DISTRICT FOR LOCATION(S).
18	CONDUCT OPERATIONS WITH MINIMUM INTERFERENCE TO PUBLIC OR PRIVATE THOROUGHFARES. MAINTAIN PROTECTED INGRESS AND EGRESS AT ALL TIMES.
19	ELECTRIC OR GAS LINE CUTTING SHALL NOT BE DONE ON SITE WITHOUT A WRITTEN PERMIT.
20	EROSION CONTROL MEASURES SHALL BE IMPLEMENTED TO PREVENT DEBRIS AND UNSUITABLE MATERIALS FROM ENTERING STORM DRAIN, SANITARY SEWERS AND STREETS.
21	DUST CONTROL SHALL BE IMPLEMENTED DURING DEMOLITION.

NOTE: FOR ALL NOTES ABOVE, VERIFY ALL LOCATIONS THROUGHOUT NOTED SITE PLAN OF THE SCHOOL. (TYP.) COORDINATE WITH THE DISTRICT.

GENERAL NOTES | 1

CRACK-FILL, SLURRY AND SEAL AREA WITH TWO COATS. REPAINT / RE-STRIPE TO MATCH EXISTING INCLUDING ADA PARKING SPACES.

REMOVE AND REPLACE ASPHALT.
REPAINT / RE-STRIPE TO MATCH EXISTING INCLUDING ADA PARKING SPACES.

LEGEND | 4

NOTE:
1. AREAS SHOWN ARE APPROXIMATE TO GIVE AN UNDERSTANDING OF THE MAGNITUDE OF THE PROJECT. DEMOLITION IS LIMITED TO WITHIN DEMOLITION LIMIT LINES, UNLESS NOTED OTHERWISE. BIDDERS MUST FIELD VERIFY ACTUAL AREAS PRIOR TO BIDDING.
2. CONTRACTOR IS TO DOCUMENT EXISTING PARKING STRIPING WITH PHOTOS, VIDEO, DRAWINGS AS THEY WILL NEED TO RE-STRIPE IT.
3. SEE SPECS FOR PAINT TYPES.
4. SEE SPECS FOR CRACK-FILL AND SLURRY COATING.
5. SEE SHEET A-03 FOR ALL ASPHALT DETAILS.
6. SEE SHEET A-04 FOR ALL PARKING DETAILS.

NOT USED | 2

Downey Unified School District
11627 Brookshire Ave,
Downey • CA • 90241
562.469.6500

The Drawings, Specifications and other documents prepared by DUSD for this project are for use on the project only and may not be used (1) on any other projects, (2) for additions to this project, or (3) for the completion of this project by others, unless otherwise expressly agreed by DUSD in writing. The Drawings, Specifications and other documents prepared by DUSD for this project are exclusive property of DUSD and may not be used, duplicated, copied, transferred, assigned, sold, or hypothecated without the express written permission of DUSD. DUSD retains all common law, statutory, and other legal rights, including copyright, in and to the Drawings, Specifications and other documents prepared by DUSD.

This and all other project documents and all ideas, aesthetics and designs incorporated therein are registered property of DUSD and cannot be lawfully used in whole or in part for any project or purpose except as described in the contractual agreement between DUSD and Client. DUSD hereby gives formal notice that any such project documents use, reproduction or modification (misuse) is not only unlawful but automatically binds all parties involved with misuse to fully indemnify and defend DUSD and DUSD's Consultants to the maximum legal extent against all losses, demands, claims or liabilities arising directly or indirectly from project document misuse.

Project documents described design intent or work and are not a representation of as-built or existing conditions. DUSD makes no representations concerning the accuracy or documents and are not responsible for any descrepancies between project documents and the existing conditions.

Carpenter Elementary School

9439 Foster Rd, • Downey, CA • 90242

Paving Project

Project No.:
Date:
Scale:

SITE PLAN

A-01

© Dowell Rogers Thom Architects Site Projects\2020 Survey Update Projects\Updated Documents\A-01 Carpenter Paving - Site Plan.dwg

PRINTED DATE: February 23, 2022

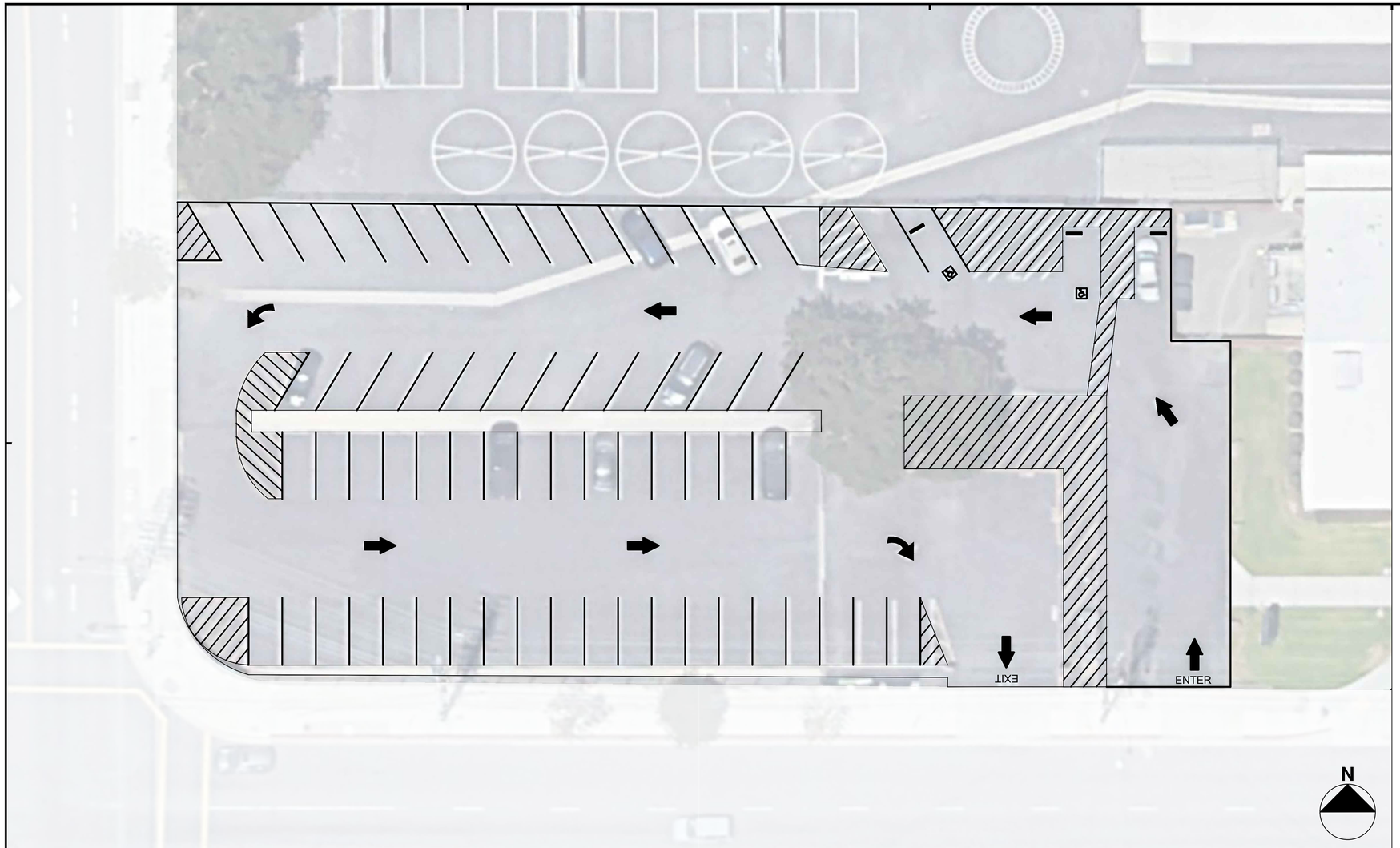

CARPENTER ELEMENTARY SCHOOL - STRIPING PLAN | 3

REPAINT / RE-STRIPE TO MATCH EXISTING LAYOUT INCLUDING ADA PARKING SPACES, ARROWS, LETTERING AND NO PARKING ZONES. SEE SHEET 04 FOR ALL PARKING STRIPING DETAILS.

GENERAL NOTES | 1

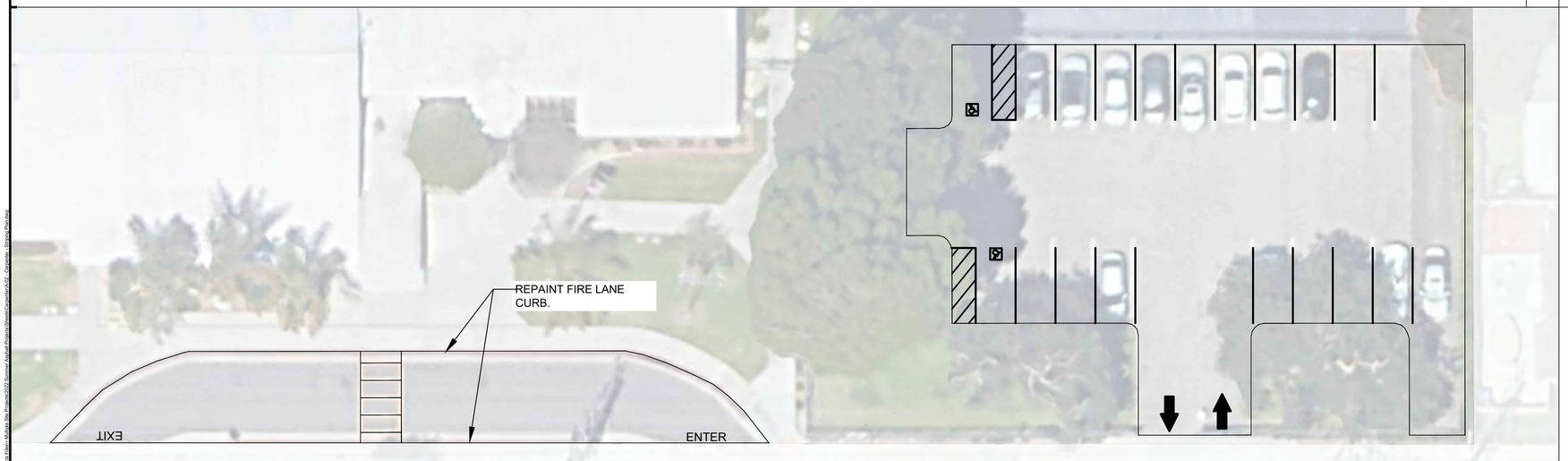

CARPENTER ELEMENTARY SCHOOL - STRIPING PLAN | 4

NOT USED | 2

DUSD
Downey Unified School District
11627 Brookshire Ave,
Downey • CA • 90241
562.469.6500

The Drawings, Specifications and other documents prepared by DUSD for this project are for use on the project only and may not be used (1) on any other projects, (2) for additions to this project, or (3) for the completion of this project by others, unless otherwise expressly agreed by DUSD in writing. The Drawings, Specifications and other documents prepared by DUSD for this project are exclusive property of DUSD and may not be used, duplicated, copied, transferred, assigned, sold, or hypothecated without the express written permission of DUSD. DUSD retains all common law, statutory, and other legal rights, including copyright, in and to the Drawings, Specifications and other documents prepared by DUSD.

This and all other project documents and all ideas, aesthetics and designs incorporated therein are registered property of DUSD and cannot be lawfully used in whole or in part for any project or purpose except as described in the contractual agreement between DUSD and Client. DUSD hereby gives formal notice that any such project documents use, reproduction or modification (misuse) is not only unlawful but automatically binds all parties involved with misuse to fully indemnify and defend DUSD and DUSD's Consultants to the maximum legal extent against all losses, demands, claims or liabilities arising directly or indirectly from project document misuse.

Project documents described design intent or work and are not a representation of as-built or existing conditions. DUSD makes no representations concerning the accuracy or documents and are not responsible for any descrepancies between project documents and the existing conditions.

Carpenter Elementary School

9439 Foster Rd, • Downey, CA • 90242

Paving Project

Project No.:

Date:

Scale:

STRIPING PLAN

A-02

C:\Drive\Projects\Misc. Minors\Re-Striping\2022 Summer Asphalt Projects\Drawings\Carpenter\A-02 - Carpenter - Striping Plan.dwg

PRINTED DATE: February 15, 2022

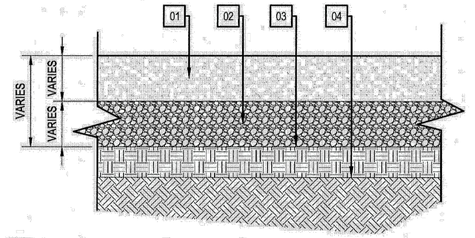

01 ASPHALT CONCRETE PAVING:
PARKING STALL PAVING - 4" THICK
DRIVE AISLE PAVING - 4" THICK
HEAVY DUTY PAVING - 6.5" THICK

02 AGGREGATE BASE:
PARKING STALL PAVING - 8" THICK
DRIVE AISLE PAVING - 11.5" THICK
HEAVY DUTY PAVING - 11.5" THICK

03 AGGREGATE BASE COMPACTED TO AT LEAST 95% RELATIVE COMPACTION.

04 SCARIFY, MOISTURE CONDITION & COMPACT 6" SUBGRADE TO AT LEAST 95% RELATIVE COMPACTION.

ASPHALT DETAIL — SCALE: N.T.S. — 1

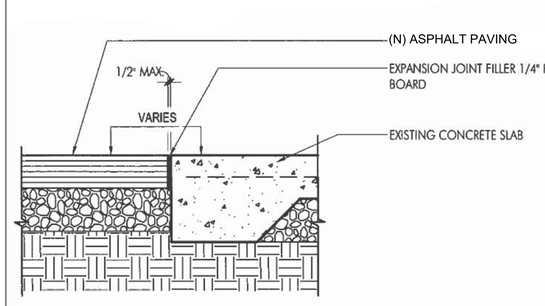

ASPHALT EDGE DETAILS - A — SCALE: N.T.S. — 2

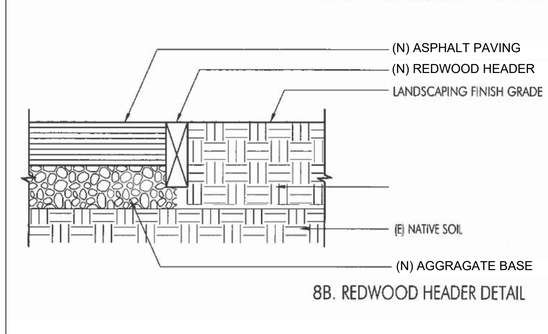

8B. REDWOOD HEADER DETAIL

ASPHALT EDGE DETAILS - B — SCALE: N.T.S. — 3

Downey Unified School District
11627 Brookshire Ave,
Downey • CA • 90241
562.469.6500

The Drawings, Specifications and other documents prepared by DUSD for this project are for use on the project only and may not be used (1) on any other projects, (2) for additions to this project, or (3) for the completion of this project by others, unless otherwise expressly agreed by DUSD in writing. The Drawings, Specifications and other documents prepared by DUSD for this project are exclusive property of DUSD and may not be used, duplicated, copied, transferred, assigned, sold, or hypothecated without the express written permission of DUSD. DUSD retains all common law, statutory, and other legal rights, including copyright, in and to the Drawings, Specifications and other documents prepared by DUSD.

This and all other project documents and all ideas, aesthetics and designs incorporated therein are registered property of DUSD and cannot be lawfully used in whole or in part for any project or purpose except as described in the contractual agreement between DUSD and Client. DUSD hereby gives formal notice that any such project documents use, reproduction or modification (misuse) is not only unlawful but automatically binds all parties involved with misuse to fully indemnify and defend DUSD and DUSD's Consultants to the maximum legal extent against all losses, demands, claims or liabilities arising directly or indirectly from project document misuse.

Project documents described design intent or work and are not a representation of as-built or existing conditions. DUSD makes no representations concerning the accuracy or documents and are not responsible for any descrepancies between project documents and the existing conditions.

Carpenter Elementary School
9439 Foster Rd, • Downey, CA • 90242
Paving Project

Project No.:
Date:
Scale:

ASPHALT DETAILS

A-03

C:\Users\Rogelio.Tinoco\Autodesk Docs\Projects\2020\Carpenter Asphalt Phase\Arch\Carpenter A-03 - Asphalt Details.rvt

PRINTED DATE: February 4, 2022

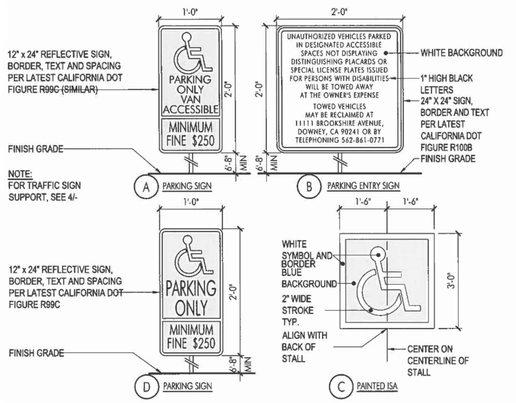

SIGNAGE SCALE: N.T.S. 4

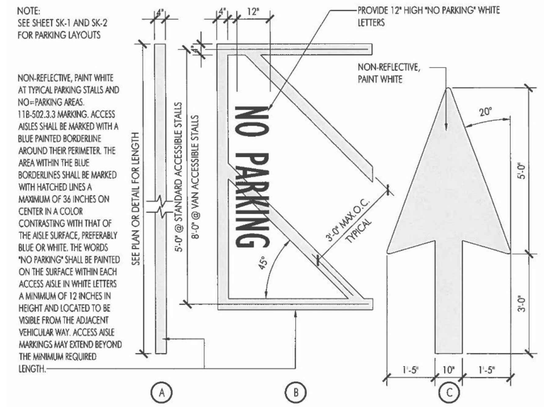

PAVEMENT MARKINGS SCALE: 1/2"=1'=0" 1

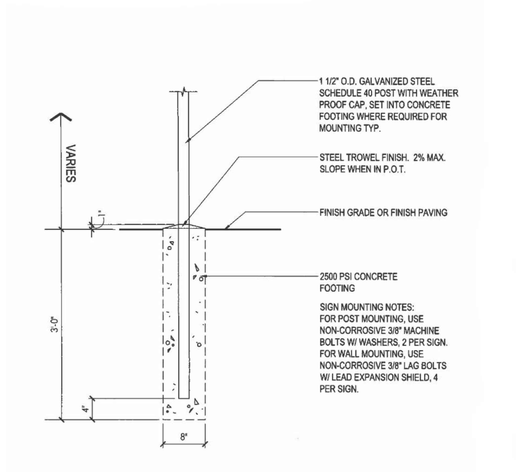

SIGN POST SCALE: 1"=1'=0" 5

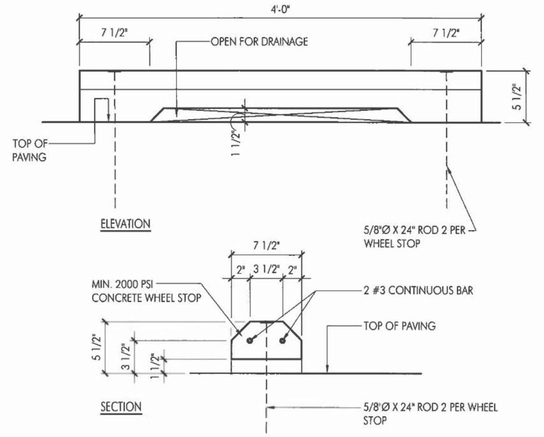

CONCRETE WHEEL STOP SCALE: 1 1/2"=1'=0" 2

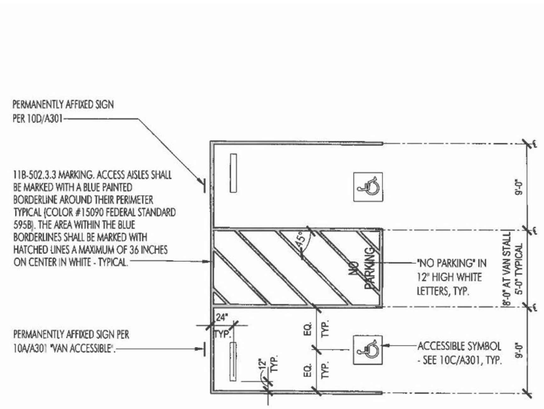

TYPICAL PARKING LAYOUT SCALE: 1/8"=1'=0" 3

DUSD
Downey Unified School District
11627 Brookshire Ave,
Downey • CA • 90241
562.469.6500

The Drawings, Specifications and other documents prepared by DUSD for this project are for use on the project only and may not be used (1) on any other projects, (2) for additions to this project, or (3) for the completion of this project by others, unless otherwise expressly agreed by DUSD in writing. The Drawings, Specifications and other documents prepared by DUSD for this project are exclusive property of DUSD and may not be used, duplicated, copied, transferred, assigned, sold, or hypothecated without the express written permission of DUSD. DUSD retains all common law, statutory, and other legal rights, including copyright, in and to the Drawings, Specifications and other documents prepared by DUSD.

This and all other project documents and all ideas, aesthetics and designs incorporated therein are registered property of DUSD and cannot be lawfully used in whole or in part for any project or purpose except as described in the contractual agreement between DUSD and Client. DUSD hereby gives formal notice that any such project documents use, reproduction or modification (misuse) is not only unlawful but automatically binds all parties involved with misuse to fully indemnify and defend DUSD and DUSD's Consultants to the maximum legal extent against all losses, demands, claims or liabilities arising directly or indirectly from project document misuse.

Project documents described design intent or work and are not a representation of as-built or existing conditions. DUSD makes no representations concerning the accuracy or documents and are not responsible for any descrepancies between project documents and the existing conditions.

Carpenter Elementary School

9439 Foster Rd, • Downey, CA • 90242

Paving Project

Project No.:

Date:

Scale:

PARKING DETAILS

A-04

C:\Users\Projects Files - Multiple Site Projects\2022 Summer Asphalt Projects\Sheet\Carpenter\A-04 - Carpenter Paving - Parking Details.dwg

PRINTED DATE: February 4, 2022

Downey Unified School District
Downey • California • 90241

Paving Project At:

Downey Unified District Office

1. CHANGES TO THE APPROVED DRAWINGS AND SPECIFICATIONS SHALL BE MADE BY ADDENDA OR A CHANGE ORDER APPROVED BY THE SCHOOL DISTRICT.
2. SHOULD THE CONTRACTOR HAVE A QUESTION OR NEED FOR CLARIFICATION ABOUT SCOPE RELATED TO SCOPE, A FORMAL REQUEST FOR INFORMATION (RFI) WILL NEED TO BE SUBMITTED STATING SIGNIFICANT INFORMATION SUCH AS THE AREA OF SCOPE WITH REFERENCE PHOTOS AND COMPLETE QUESTION(S) / REMARKS OF THE AREA.
3. THE CONTRACTOR SHALL VERIFY THE LOCATION AND QUANTITY OF EXISTING SURFACE STRUCTURES AND SHALL BE SOLELY RESPONSIBLE FOR ANY UNIDENTIFIED UTILITIES, IMPROVEMENTS, TREES, ETC. TO BE DEMOLISHED AND REMOVED WITHIN THE DEMOLITION LIMIT LINE, INCLUDING APPURTENANT FOUNDATIONS OR SUPPORTS.
4. BEFORE EARTHWORK IS STARTED, THE CONTRACTOR SHALL VERIFY THE LOCATION OF UNDERGROUND UTILITIES SHALL BE CAREFULLY VERIFIED BY HAND METHODS, UTILITIES TO BE LEFT IN PLACE AND SHALL BE PROTECTED FROM DAMAGE UNLESS OTHERWISE NOTED. LOCATIONS SHOWN ON THE PLANS ARE APPROXIMATE AND ARE SHOWN FROM GENERAL INFORMATION ONLY.
5. CONTRACTOR SHALL EXERCISE EXTREME CAUTION IN EXCAVATING AND TRENCHING ON SITE TO AVOID EXISTING DUCTS, DRAINAGE LINES, PIPING, OR CONDUITS, ETC., AND TO PREVENT HAZARD TO PERSONNEL AND/OR DAMAGE TO EXISTING UNDERGROUND UTILITIES OR STRUCTURES WHETHER OR NOT SHOWN AND/OR INSTALLED BY OTHER CONTRACTS. THE ARCHITECT, ENGINEER AND SCHOOL DISTRICT ARE NOT RESPONSIBLE FOR THE LOCATION OR THE EXISTENCE OF UNDERGROUND UTILITIES AND STRUCTURES WHETHER OR NOT SHOWN AND/OR INSTALLED BY OTHER CONTRACTS. THE CONTRACTOR SHALL IMMEDIATELY NOTIFY THE ARCHITECT, ENGINEER AND OR SCHOOL DISTRICT SHOULD SUCH UNIDENTIFIED CONDITIONS BE DISCOVERED. THESE DRAWINGS AND SPECIFICATION DO NOT INCLUDE NECESSARY COMPONENTS FOR CONSTRUCTION AND SAFETY.
6. THE CONTRACTOR SHALL BACKFILL SOIL IN THE EXCAVATED TREE ROOT PITS AND THE TRENCHES FOR REMOVED EXISTING UNDERGROUND STRUCTURES, UTILITIES AND IMPROVEMENTS.
7. THE CONTRACTOR SHALL NOT ABANDON-IN-PLACE ANY EXISTING UNDERGROUND STRUCTURE, UTILITY, OR IMPROVEMENT SO DESIGNATED FOR REMOVAL IN THE PROJECT PLANS UNLESS DIRECTED TO BY THE OWNER.
8. CONTRACTOR TO SAWCUT ALL EXISTING A.C. AND CONCRETE PAVEMENT AT DEMOLITION LIMIT LINE. CONTRACTOR SHALL REMOVE SIDEWALK TO THE NEAREST JOINT.
9. THE CONTRACTOR SHALL WALK THE SITE PRIOR TO BIDDING, TO DETERMINE THE TRUE EXTENT OF REMOVAL WORK REQUIRED. THE CONTRACTOR SHALL VERIFY ALL DIMENSIONS AND CONDITIONS BEFORE BIDDING ON THE JOB.

GENERAL NOTES | 4

1. IT IS THE CONTRACTOR'S RESPONSIBILITY TO LOCATE AND PROTECT FROM DAMAGE ALL UTILITIES AND SUBSTRUCTURES WITHIN THE LIMITS OF NEW WORK WHETHER SHOWN OR NOT ON THE PLAN. THE CONTRACTOR WILL BE HELD RESPONSIBLE AND SHALL BEAR THE TOTAL EXPENSE OF REPAIR OR REPLACEMENT OF SAID UTILITIES AND SUBSTRUCTURES DAMAGED BY HIS OPERATION IN CONNECTION WITH EXECUTION OF THIS WORK. THE CONTRACTOR SHALL ALSO BE RESPONSIBLE FOR ALL DAMAGES TO SAID UTILITIES AND SUBSTRUCTURES AS STATED ON THESE GENERAL NOTES.
2. PRIOR TO COMMENCING WORK, THE CONTRACTOR SHALL WALK THE AREAS WITH THE INSPECTOR AND DOCUMENT A LIST OF ANY EXISTING DAMAGES TO EXISTING IMPROVEMENTS. ANY DAMAGES LATER DISCOVERED THAT ARE NOT ON THIS LIST WILL BE ASSUMED TO HAVE BEEN DONE BY THE CONTRACTOR. THE CONTRACTOR SHALL BE HELD RESPONSIBLE AND BEAR THE EXPENSE FOR REPAIR OF ALL DAMAGES TO EXISTING IMPROVEMENTS.
3. A NON-TOXIC NON-FLAMMABLE WEED AND GRASS KILLER SHALL BE APPLIED TO ALL GROUND AREAS BELOW NEW PAVING. THE WEED KILLER SHALL BE APPLIED AT A RATE WHICH GUARANTEES NO WEED, GRASS, PLANT, MUSHROOM, OR OTHER GROWTH TO OCCUR FOR A PERIOD OF ONE YEAR FROM DATE OF APPLICATION.
4. IN NO CASE SHALL WORKING DIMENSIONS BE SCALED FROM PLANS, SECTIONS, OR DETAILS ON THE WORKING DRAWINGS.
5. FLAT SITE CONCRETE SHALL HAVE A COMPRESSIVE STRENGTH OF 3,500 P.S.I. @ 28 DAYS 4" MAXIMUM SLUMP, REINFORCING STEEL FOR CONCRETE SHALL BE GRADE 40 FOR ALL CONCRETE WALKS. INSTALL #4 @ 18" O.C. EACH WAY UNLESS OTHERWISE NOTED.
6. BURNING OF MATERIALS AND/OR USE OF EXPLOSIVES ARE NOT PERMITTED ON-SITE.
7. CONTRACTOR TO CEASE OPERATIONS AND NOTIFY THE DISTRICT IMMEDIATELY IF SURROUNDING STRUCTURES APPEAR TO BE ENDANGERED. DO NOT RESUME OPERATIONS UNTIL CORRECTIVE MEASURES HAVE BEEN TAKEN.
8. IF CONTAMINATED OR VERMIN INFECTED MATERIALS ARE ENCOUNTERED, CONTACT THE DISTRICT IMMEDIATELY AND WAIT FOR DIRECTIONS. DO NOT DISPOSE OF HAZARDOUS MATERIALS WITHOUT FURTHER DIRECTIONS FROM THE OWNER.
9. CONTRACTOR SHALL REPLACE AND PATCH ALL EXISTING SURFACES DAMAGED OR AFFECTED OUTSIDE THE DEMOLITION LIMIT LINE THAT ARE DAMAGED / AFFECTED DURING THIS CONSTRUCTION CONTRACT TO MATCH EXISTING, INCLUDING PERMANENT TRENCH RESURFACING.

GENERAL NOTES | 3

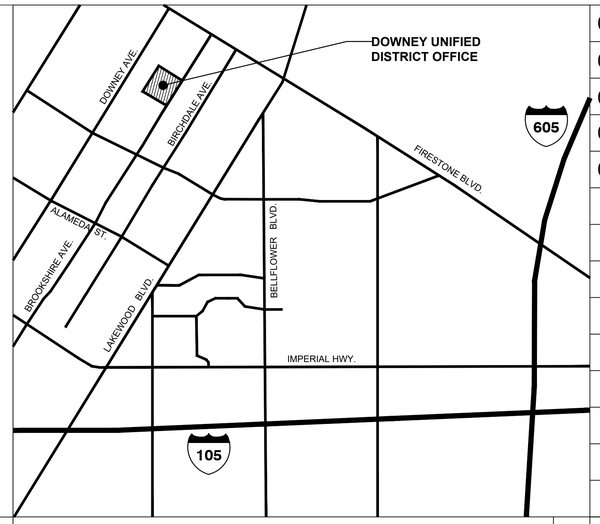

VICINITY MAP | 2

01	T-00	TITLE SHEET
02	A-01	SITE PLAN
03	A-02	STRIPING PLAN
04	A-03	ASPHALT DETAILS
05	A-04	PARKING DETAILS

SHEET INDEX | 1

PRINTED DATE: February 22, 2022

Downey Unified School District
11627 Brookshire Ave, Downey • CA • 90241
562.469.6500

The Drawings, Specifications and other documents prepared by DUSD for this project are for use on the project only and may not be used (1) on any other projects, (2) for additions to this project, or (3) for the completion of this project by others, unless otherwise expressly agreed by DUSD in writing. The Drawings, Specifications and other documents prepared by DUSD for this project are exclusive property of DUSD and may not be used, duplicated, copied, transferred, assigned, sold, or hypothecated without the express written permission of DUSD. DUSD retains all common law, statutory, and other legal rights, including copyright, in and to the Drawings, Specifications and other documents prepared by DUSD.

This and all other project documents and all ideas, aesthetics and designs incorporated therein are registered property of DUSD and cannot be lawfully used in whole or in part for any project or purpose except as described in the contractual agreement between DUSD and Client. DUSD hereby gives formal notice that any such project documents use, reproduction or modification (misuse) is not only unlawful but automatically, binds all parties involved with misuse to fully indemnify and defend DUSD and DUSD's Consultants to the maximum legal extent against all losses, demands, claims or liabilities arising directly or indirectly from project document misuse.

Project documents described design intent or work and are not a representation of as-built or existing conditions. DUSD makes no representations concerning the accuracy or documents and are not responsible for any descrepancies between project documents and the existing conditions.

Downey Unified School District
11627 Brookshire Ave, • Downey, CA • 90242
Paving Project

Project No.:
Date:
Scale:

TITLE SHEET

T-00

C:\Users\Dennis Peters, Multiple Rec Resources\2 Survey Projects\Downey Unified District\Dwg\T-00 Paving - Cover Page.dwg

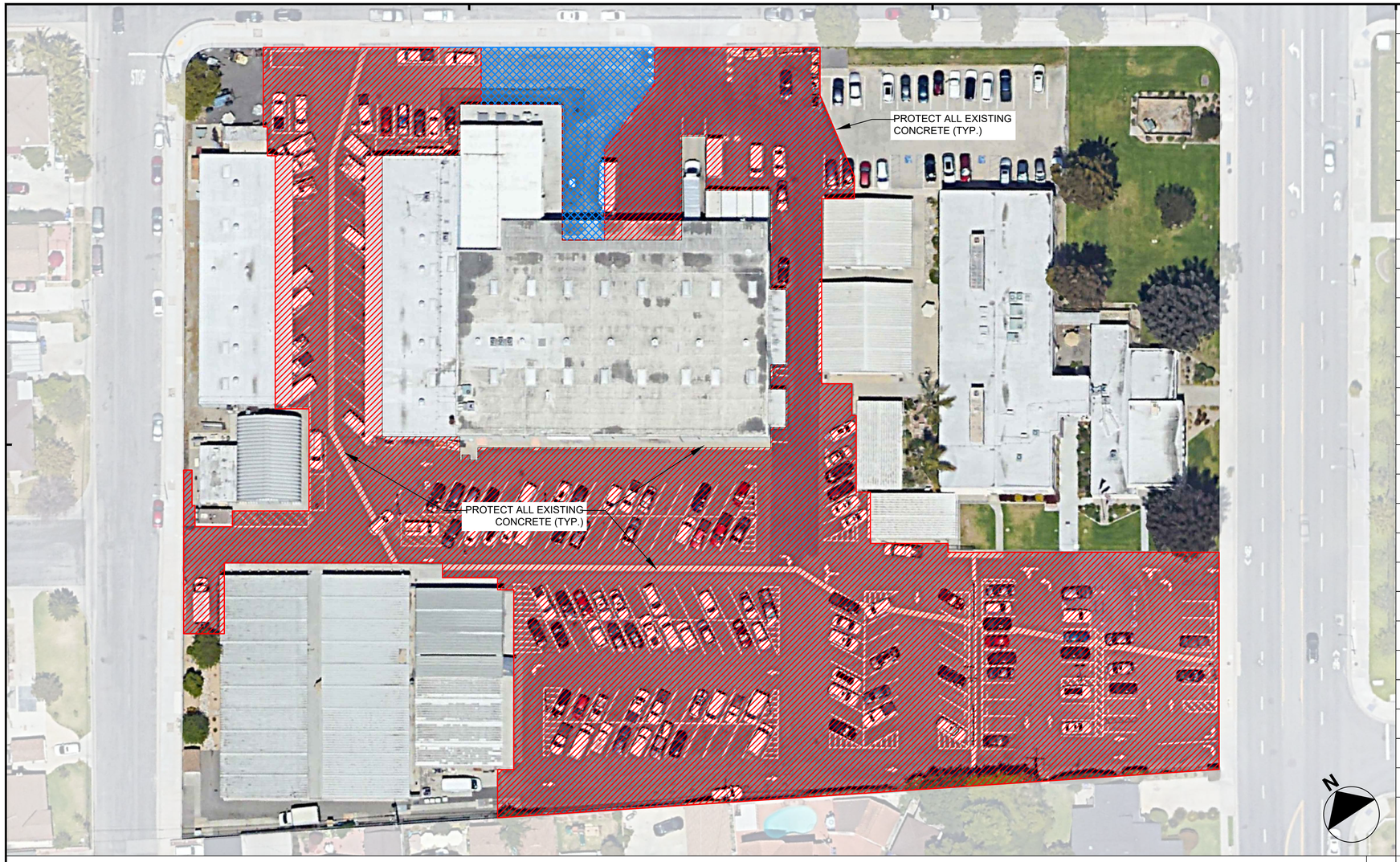

DOWNEY UNIFIED DISTRICT OFFICE - SITE PLAN

1	PROTECT IN PLACE ALL CONCRETE UTILITY LIDS ON THE GROUND, EXISTING VAULTS AND HAND HOLES.
2	PROTECT IN PLACE ALL EXISTING ROOF DOWN SPOUTS.
3	REMOVE, STORE AND REINSTALL ANY EXISTING BENCHES AND LUNCH TABLES.
4	PROTECT IN PLACE ANY EXISTING FENCES AND UTILITY CONDUITS.
5	PROTECT ALL EXISTING CONCRETE, CONCRETE SIDEWALKS AND CONCRETE DRAINAGE SWALES WITHIN THE AREA OF WORK.
6	INSTALL NEW RED WOOD HEADERS ALL AROUND THE NEW ASPHALT AREAS.
7	INSTALL NEW CONCRETE WHEEL STOPS AT THE AREAS WHERE NEW ASPHALT PAVING OCCURS.
8	REPLACE ANY DAMAGED CONCRETE WHEEL STOPS AT AREAS WHERE NEW ASPHALT OR SLURRY OCCURS.
9	REPAINT / RE-STRIPE ALL PARKING LOT LINES AND OR CURBS AFFECTED INCLUDING ANY ADA PARKING. MATCH EXISTING.
10	REMOVE, STORE AND RE-INSTALL ANY BOLLARDS.
11	TEMPORARILY MOVE ANY TRASH BIN CONTAINERS OUT OF THE WAY IF SCOPE IS IN THAT AREA.
12	REPLACE ANY LANDSCAPE AREA THAT IS DAMAGED DUE TO CONSTRUCTION ACTIVITY.
13	PROTECT ALL EXISTING POLES, HANDRAILS AND ASSOCIATED FOOTINGS. IF REPLACING ASPHALT AROUND THEM, REMOVE ASPHALT BY HAND TO PROTECT FOOTINGS.
14	REMOVE DEMOLISHED MATERIALS FROM SITE AS WORK PROGRESSES. LEAVE SITE IN CLEAN CONDITION.
15	COMPLY WITH ANSI A10.6 "SAFETY CONDITIONS FOR DEMOLITION" PUBLISHED BY THE AMERICAN NATIONAL STANDARDS INSTITUTE.
16	CONDUCT DEMOLITION TO MINIMIZE INTERFERENCE WITH SURROUNDING AREAS.
17	INSTALL A SECURITY FENCE SURROUNDING PROJECT SITE AS NEEDED. COORDINATE WITH THE DISTRICT FOR LOCATION(S).
18	CONDUCT OPERATIONS WITH MINIMUM INTERFERENCE TO PUBLIC OR PRIVATE THOROUGHFARES. MAINTAIN PROTECTED INGRESS AND EGRESS AT ALL TIMES.
19	ELECTRIC OR GAS LINE CUTTING SHALL NOT BE DONE ON SITE WITHOUT A WRITTEN PERMIT.
20	EROSION CONTROL MEASURES SHALL BE IMPLEMENTED TO PREVENT DEBRIS AND UNSUITABLE MATERIALS FROM ENTERING STORM DRAIN, SANITARY SEWERS AND STREETS.
21	DUST CONTROL SHALL BE IMPLEMENTED DURING DEMOLITION.

NOTE: FOR ALL NOTES ABOVE, VERIFY ALL LOCATIONS THROUGHOUT NOTED SITE PLAN OF THE SCHOOL. (TYP.) COORDINATE WITH THE DISTRICT.

SCOPE NOTES

CRACK-FILL, SLURRY AND SEAL AREA WITH TWO COATS. REPAINT / RE-STRIPE TO MATCH EXISTING INCLUDING ADA PARKING SPACES.

REMOVE AND REPLACE ASPHALT.
REPAINT / RE-STRIPE TO MATCH EXISTING INCLUDING ADA PARKING SPACES.

NOTE:
1. AREAS SHOWN ARE APPROXIMATE TO GIVE AN UNDERSTANDING OF THE MAGNITUDE OF THE PROJECT. DEMOLITION IS LIMITED TO WITHIN DEMOLITION LIMIT LINES, UNLESS NOTED OTHERWISE. BIDDERS MUST FIELD VERIFY ACTUAL AREAS PRIOR TO BIDDING.
2. CONTRACTOR IS TO DOCUMENT EXISTING PARKING STRIPING WITH PHOTOS, VIDEO, DRAWINGS AS THEY WILL NEED TO RE-STRIPE IT.
3. SEE SPECS FOR PAINT TYPES.
4. SEE SPECS FOR CRACK-FILL AND SLURRY COATING.
5. SEE SHEET A-03 FOR ALL ASPHALT DETAILS.
6. SEE SHEET A-04 FOR ALL PARKING DETAILS.

NOTES

NOT USED

Downey Unified School District
11627 Brookshire Ave, Downey • CA • 90241
562.469.6500

The Drawings, Specifications and other documents prepared by DUSD for this project are for use on the project only and may not be used (1) on any other projects, (2) for additions to this project, or (3) for the completion of this project by others, unless otherwise expressly agreed by DUSD in writing. The Drawings, Specifications and other documents prepared by DUSD for this project are exclusive property of DUSD and may not be used, duplicated, copied, transferred, assigned, sold, or hypothecated without the express written permission of DUSD. DUSD retains all common law, statutory, and other legal rights, including copyright, in and to the Drawings, Specifications and other documents prepared by DUSD.

This and all other project documents and all ideas, aesthetics and designs incorporated therein are registered property of DUSD and cannot be lawfully used in whole or in part for any project or purpose except as described in the contractual agreement between DUSD and Client. DUSD hereby gives formal notice that any such project documents use, reproduction or modification (misuse) is not only unlawful but automatically binds all parties involved with misuse to fully indemnify and defend DUSD and DUSD's Consultants to the maximum legal extent against all losses, demands, claims or liabilities arising directly or indirectly from project document misuse.

Project documents described design intent or work and are not a representation of as-built or existing conditions. DUSD makes no representations concerning the accuracy or documents and are not responsible for any descrepancies between project documents and the existing conditions.

Downey Unified School District
11627 Brookshire Ave, • Downey, CA • 90242
Paving Project

Project No.:
Date:
Scale:

SITE PLAN

A-01

C:\Users\Rodney.Mann\Desktop\Site Projects\2022 Summer Asphalt Projects\Revised Drawings\A-01 D.U. Plan.dwg

PRINTED DATE: February 23, 2022



DOWNEY UNIFIED DISTRICT OFFICE - SITE PLAN | 4

REPAINT / RE-STRIPE TO MATCH EXISTING LAYOUT INCLUDING ADA PARKING SPACES, ARROWS, LETTERING AND NO PARKING ZONES. CHECK ALL SPACE INCLUDING AREAS UNDER COVERED STRUCTURES NOT SHOWN ON THIS PLAN. SEE SHEET 04 FOR ALL PARKING STRIPING DETAILS.

SCOPE NOTES | 1

NOT USED | 2

Downey Unified School District

11627 Brookshire Ave, Downey • CA • 90241

562.469.6500

The Drawings, Specifications and other documents prepared by DUSD for this project are for use on the project only and may not be used (1) on any other projects, (2) for additions to this project, or (3) for the completion of this project by others, unless otherwise expressly agreed by DUSD in writing. The Drawings, Specifications and other documents prepared by DUSD for this project are exclusive property of DUSD and may not be used, duplicated, copied, transferred, assigned, sold, or hypothecated without the express written permission of DUSD. DUSD retains all common law, statutory, and other legal rights, including copyright, in and to the Drawings, Specifications and other documents prepared by DUSD.

This and all other project documents and all ideas, aesthetics and designs incorporated therein are registered property of DUSD and cannot be lawfully used in whole or in part for any project or purpose except as described in the contractual agreement between DUSD and Client. DUSD hereby gives formal notice that any such project documents use, reproduction or modification (misuse) is not only unlawful but automatically binds all parties involved with misuse to fully indemnify and defend DUSD and DUSD's Consultants to the maximum legal extent against all losses, demands, claims or liabilities arising directly or indirectly from project document misuse.

Project documents described design intent or work and are not a representation of as-built or existing conditions. DUSD makes no representations concerning the accuracy or documents and are not responsible for any descrepancies between project documents and the existing conditions.

Downey Unified School District

11627 Brookshire Ave, • Downey, CA • 90242

Paving Project

Project No.:

Date:

Scale:

STRIPING PLAN

A-02

C:\Users\Rodney.Mathis\Box\Projects\2020 Summer Asphalt Projects\Revit Files\A-02 - SITE Plan.rvt

PRINTED DATE: February 22, 2022

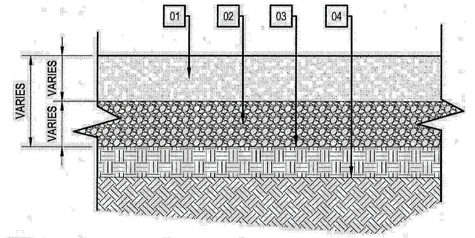

01 ASPHALT CONCRETE PAVING:
PARKING STALL PAVING - 4" THICK
DRIVE AISLE PAVING - 4" THICK
HEAVY DUTY PAVING - 6.5" THICK

02 AGGREGATE BASE:
PARKING STALL PAVING - 8" THICK
DRIVE AISLE PAVING - 11.5" THICK
HEAVY DUTY PAVING - 11.5" THICK

03 AGGREGATE BASE COMPACTED TO AT LEAST 95% RELATIVE COMPACTION.

04 SCARIFY, MOISTURE CONDITION & COMPACT 6" SUBGRADE TO AT LEAST 95% RELATIVE COMPACTION.

ASPHALT DETAIL SCALE: N.T.S. 1

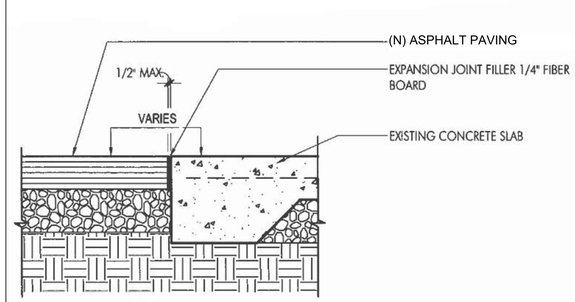

ASPHALT EDGE DETAILS - A SCALE: N.T.S. 2

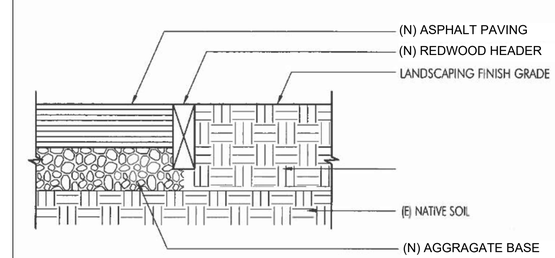

8B. REDWOOD HEADER DETAIL

ASPHALT EDGE DETAILS - B SCALE: N.T.S. 3

PRINTED DATE: February 22, 2022

Downey Unified School District
11627 Brookshire Ave,
Downey • CA • 90241
562.469.6500

The Drawings, Specifications and other documents prepared by DUSD for this project are for use on the project only and may not be used (1) on any other projects, (2) for additions to this project, or (3) for the completion of this project by others, unless otherwise expressly agreed by DUSD in writing. The Drawings, Specifications and other documents prepared by DUSD for this project are exclusive property of DUSD and may not be used, duplicated, copied, transferred, assigned, sold, or hypothecated without the express written permission of DUSD. DUSD retains all common law, statutory, and other legal rights, including copyright, in and to the Drawings, Specifications and other documents prepared by DUSD.

This and all other project documents and all ideas, aesthetics and designs incorporated therein are registered property of DUSD and cannot be lawfully used in whole or in part for any project or purpose except as described in the contractual agreement between DUSD and Client. DUSD hereby gives formal notice that any such project documents use, reproduction or modification (misuse) is not only unlawful but automatically binds all parties involved with misuse to fully indemnify and defend DUSD and DUSD's Consultants to the maximum legal extent against all losses, demands, claims or liabilities arising directly or indirectly from project document misuse.

Project documents described design intent or work and are not a representation of as-built or existing conditions. DUSD makes no representations concerning the accuracy or documents and are not responsible for any descrepancies between project documents and the existing conditions.

Downey Unified School District
11627 Brookshire Ave, • Downey, CA • 90242
Paving Project

Project No.:
Date:
Scale:

ASPHALT DETAILS

A-03

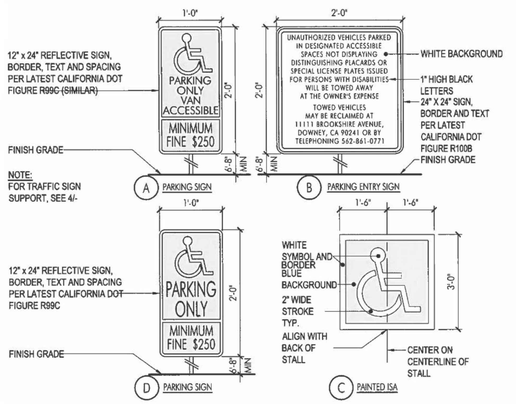

SIGNAGE SCALE: N.T.S. 4

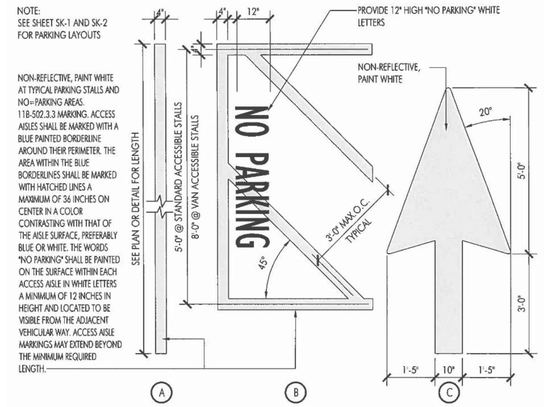

PAVEMENT MARKINGS SCALE: 1/2"=1'=0" 1

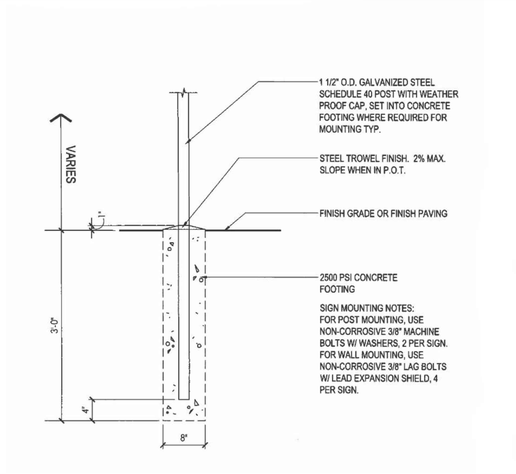

SIGN POST SCALE: 1"=1'=0" 5

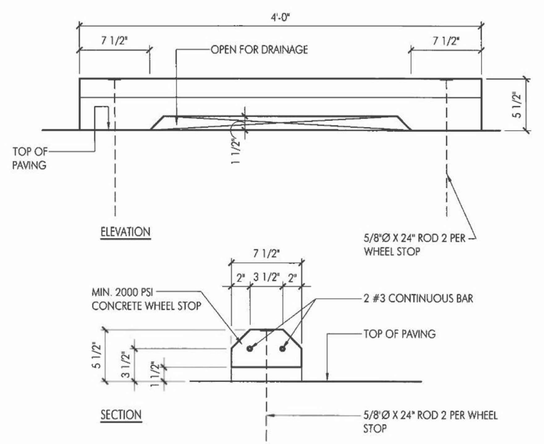

CONCRETE WHEEL STOP SCALE: 1 1/2"=1'=0" 2

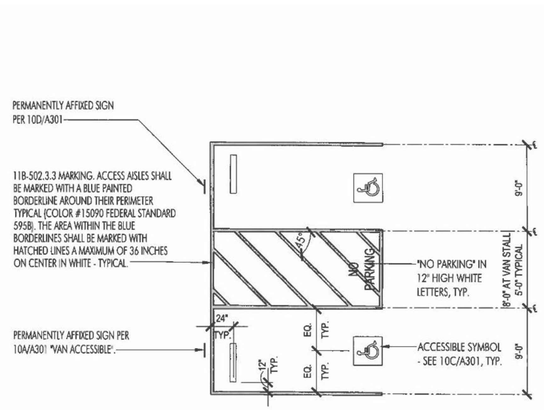

TYPICAL PARKING LAYOUT SCALE: 1/8"=1'=0" 3

DUSD
Downey Unified School District
11627 Brookshire Ave, Downey • CA • 90241
562.469.6500

The Drawings, Specifications and other documents prepared by DUSD for this project are for use on the project only and may not be used (1) on any other projects, (2) for additions to this project, or (3) for the completion of this project by others, unless otherwise expressly agreed by DUSD in writing. The Drawings, Specifications and other documents prepared by DUSD for this project are exclusive property of DUSD and may not be used, duplicated, copied, transferred, assigned, sold, or hypothecated without the express written permission of DUSD. DUSD retains all common law, statutory, and other legal rights, including copyright, in and to the Drawings, Specifications and other documents prepared by DUSD.

This and all other project documents and all ideas, aesthetics and designs incorporated therein are registered property of DUSD and cannot be lawfully used in whole or in part for any project or purpose except as described in the contractual agreement between DUSD and Client. DUSD hereby gives formal notice that any such project documents use, reproduction or modification (misuse) is not only unlawful but automatically binds all parties involved with misuse to fully indemnify and defend DUSD and DUSD's Consultants to the maximum legal extent against all losses, demands, claims or liabilities arising directly or indirectly from project document misuse.

Project documents described design intent or work and are not a representation of as-built or existing conditions. DUSD makes no representations concerning the accuracy or documents and are not responsible for any descrepancies between project documents and the existing conditions.

Downey Unified School District
11627 Brookshire Ave, • Downey, CA • 90242
Paving Project

Project No.:
Date:
Scale:

PARKING DETAILS

A-04

C:\Users\Rebecca.Flores\Autodesk Docs\Projects\2022 Summer Asphalt Projects\Rosco Offsite\A-04 Details, Parking Details.dwg

PRINTED DATE: February 22, 2022

Downey Unified School District
Downey • California • 90241

Paving Project At:

Price Elementary School

1. CHANGES TO THE APPROVED DRAWINGS AND SPECIFICATIONS SHALL BE MADE BY ADDENDA OR A CHANGE ORDER APPROVED BY THE SCHOOL DISTRICT.
2. SHOULD THE CONTRACTOR HAVE A QUESTION OR NEED FOR CLARIFICATION ABOUT SCOPE RELATED TO SCOPE, A FORMAL REQUEST FOR INFORMATION (RFI) WILL NEED TO BE SUBMITTED STATING SIGNIFICANT INFORMATION SUCH AS THE AREA OF SCOPE WITH REFERENCE PHOTOS AND COMPLETE QUESTION(S) / REMARKS OF THE AREA.
3. THE CONTRACTOR SHALL VERIFY THE LOCATION AND QUANTITY OF EXISTING SURFACE STRUCTURES AND SHALL BE SOLELY RESPONSIBLE FOR ANY UNIDENTIFIED UTILITIES, IMPROVEMENTS, TREES, ETC. TO BE DEMOLISHED AND REMOVED WITHIN THE DEMOLITION LIMIT LINE, INCLUDING APPURTENANT FOUNDATIONS OR SUPPORTS.
4. BEFORE EARTHWORK IS STARTED, THE CONTRACTOR SHALL VERIFY THE LOCATION OF UNDERGROUND UTILITIES SHALL BE CAREFULLY VERIFIED BY HAND METHODS, UTILITIES TO BE LEFT IN PLACE AND SHALL BE PROTECTED FROM DAMAGE UNLESS OTHERWISE NOTED. LOCATIONS SHOWN ON THE PLANS ARE APPROXIMATE AND ARE SHOWN FROM GENERAL INFORMATION ONLY.
5. CONTRACTOR SHALL EXERCISE EXTREME CAUTION IN EXCAVATING AND TRENCHING ON SITE TO AVOID EXISTING DUCTS, DRAINAGE LINES, PIPING, OR CONDUITS, ETC., AND TO PREVENT HAZARD TO PERSONNEL AND/OR DAMAGE TO EXISTING UNDERGROUND UTILITIES OR STRUCTURES WHETHER OR NOT SHOWN AND/OR INSTALLED BY OTHER CONTRACTS. THE ARCHITECT, ENGINEER AND SCHOOL DISTRICT ARE NOT RESPONSIBLE FOR THE LOCATION OR THE EXISTENCE OF UNDERGROUND UTILITIES AND STRUCTURES WHETHER OR NOT SHOWN AND/OR INSTALLED BY OTHER CONTRACTS. THE CONTRACTOR SHALL IMMEDIATELY NOTIFY THE ARCHITECT, ENGINEER AND OR SCHOOL DISTRICT SHOULD SUCH UNIDENTIFIED CONDITIONS BE DISCOVERED. THESE DRAWINGS AND SPECIFICATION DO NOT INCLUDE NECESSARY COMPONENTS FOR CONSTRUCTION AND SAFETY.
6. THE CONTRACTOR SHALL BACKFILL SOIL IN THE EXCAVATED TREE ROOT PITS AND THE TRENCHES FOR REMOVED EXISTING UNDERGROUND STRUCTURES, UTILITIES AND IMPROVEMENTS.
7. THE CONTRACTOR SHALL NOT ABANDON-IN-PLACE ANY EXISTING UNDERGROUND STRUCTURE, UTILITY, OR IMPROVEMENT SO DESIGNATED FOR REMOVAL IN THE PROJECT PLANS UNLESS DIRECTED TO BY THE OWNER.
8. CONTRACTOR TO SAWCUT ALL EXISTING A.C. AND CONCRETE PAVEMENT AT DEMOLITION LIMIT LINE. CONTRACTOR SHALL REMOVE SIDEWALK TO THE NEAREST JOINT.
9. THE CONTRACTOR SHALL WALK THE SITE PRIOR TO BIDDING, TO DETERMINE THE TRUE EXTENT OF REMOVAL WORK REQUIRED. THE CONTRACTOR SHALL VERIFY ALL DIMENSIONS AND CONDITIONS BEFORE BIDDING ON THE JOB.

GENERAL NOTES | 4

1. IT IS THE CONTRACTOR'S RESPONSIBILITY TO LOCATE AND PROTECT FROM DAMAGE ALL UTILITIES AND SUBSTRUCTURES WITHIN THE LIMITS OF NEW WORK WHETHER SHOWN OR NOT ON THE PLAN. THE CONTRACTOR WILL BE HELD RESPONSIBLE AND SHALL BEAR THE TOTAL EXPENSE OF REPAIR OR REPLACEMENT OF SAID UTILITIES AND SUBSTRUCTURES DAMAGED BY HIS OPERATION IN CONNECTION WITH EXECUTION OF THIS WORK. THE CONTRACTOR SHALL ALSO BE RESPONSIBLE FOR ALL DAMAGES TO SAID UTILITIES AND SUBSTRUCTURES AS STATED ON THESE GENERAL NOTES.
2. PRIOR TO COMMENCING WORK, THE CONTRACTOR SHALL WALK THE AREAS WITH THE INSPECTOR AND DOCUMENT A LIST OF ANY EXISTING DAMAGES TO EXISTING IMPROVEMENTS. ANY DAMAGES LATER DISCOVERED THAT ARE NOT ON THIS LIST WILL BE ASSUMED TO HAVE BEEN DONE BY THE CONTRACTOR. THE CONTRACTOR SHALL BE HELD RESPONSIBLE AND BEAR THE EXPENSE FOR REPAIR OF ALL DAMAGES TO EXISTING IMPROVEMENTS.
3. A NON-TOXIC NON-FLAMMABLE WEED AND GRASS KILLER SHALL BE APPLIED TO ALL GROUND AREAS BELOW NEW PAVING. THE WEED KILLER SHALL BE APPLIED AT A RATE WHICH GUARANTEES NO WEED, GRASS, PLANT, MUSHROOM, OR OTHER GROWTH TO OCCUR FOR A PERIOD OF ONE YEAR FROM DATE OF APPLICATION.
4. IN NO CASE SHALL WORKING DIMENSIONS BE SCALED FROM PLANS, SECTIONS, OR DETAILS ON THE WORKING DRAWINGS.
5. FLAT SITE CONCRETE SHALL HAVE A COMPRESSIVE STRENGTH OF 3,500 P.S.I. @ 28 DAYS 4" MAXIMUM SLUMP, REINFORCING STEEL FOR CONCRETE SHALL BE GRADE 40 FOR ALL CONCRETE WALKS. INSTALL #4 @ 18" O.C. EACH WAY UNLESS OTHERWISE NOTED.
6. BURNING OF MATERIALS AND/OR USE OF EXPLOSIVES ARE NOT PERMITTED ON-SITE.
7. CONTRACTOR TO CEASE OPERATIONS AND NOTIFY THE DISTRICT IMMEDIATELY IF SURROUNDING STRUCTURES APPEAR TO BE ENDANGERED. DO NOT RESUME OPERATIONS UNTIL CORRECTIVE MEASURES HAVE BEEN TAKEN.
8. IF CONTAMINATED OR VERMIN INFECTED MATERIALS ARE ENCOUNTERED, CONTACT THE DISTRICT IMMEDIATELY AND WAIT FOR DIRECTIONS. DO NOT DISPOSE OF HAZARDOUS MATERIALS WITHOUT FURTHER DIRECTIONS FROM THE OWNER.
9. CONTRACTOR SHALL REPLACE AND PATCH ALL EXISTING SURFACES DAMAGED OR AFFECTED OUTSIDE THE DEMOLITION LIMIT LINE THAT ARE DAMAGED / AFFECTED DURING THIS CONSTRUCTION CONTRACT TO MATCH EXISTING, INCLUDING PERMANENT TRENCH RESURFACING.

GENERAL NOTES | 3

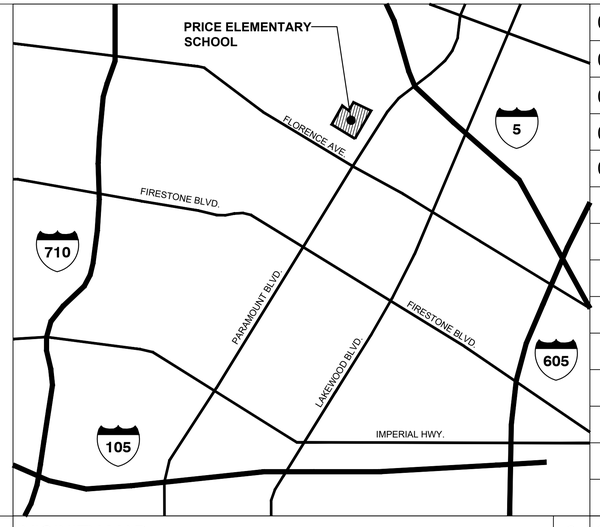

VICINITY MAP | 2

01	T-00	TITLE SHEET
02	A-01	SITE PLAN
03	A-02	STRIPING PLAN
04	A-03	CONSTRUCTION DETAILS
05	A-04	PARKING DETAILS

SHEET INDEX | 1

Downey Unified School District
11627 Brookshire Ave,
Downey • CA • 90241
562.469.6500

The Drawings, Specifications and other documents prepared by DUSD for this project are for use on the project only and may not be used (1) on any other projects, (2) for additions to this project, or (3) for the completion of this project by others, unless otherwise expressly agreed by DUSD in writing. The Drawings, Specifications and other documents prepared by DUSD for this project are exclusive property of DUSD and may not be used, duplicated, copied, transferred, assigned, sold, or hypothecated without the express written permission of DUSD. DUSD retains all common law, statutory, and other legal rights, including copyright, in and to the Drawings, Specifications and other documents prepared by DUSD.

This and all other project documents and all ideas, aesthetics and designs incorporated therein are registered property of DUSD and cannot be lawfully used in whole or in part for any project or purpose except as described in the contractual agreement between DUSD and Client. DUSD hereby gives formal notice that any such project documents use, reproduction or modification (misuse) is not only unlawful but automatically, binds all parties involved with misuse to fully indemnify and defend DUSD and DUSD's Consultants to the maximum legal extent against all losses, demands, claims or liabilities arising directly or indirectly from project document misuse.

Project documents described design intent or work and are not a representation of as-built or existing conditions. DUSD makes no representations concerning the accuracy or documents and are not responsible for any descrepancies between project documents and the existing conditions.

Price Elementary School
9525 Tweedy Ln, • Downey, CA • 90241
Paving Project

Project No.:
Date:
Scale:

TITLE SHEET

T-00

J:\Current Projects\Price\Master Set Projects\2020 Summer Asphalt Projects\Submittal\20-00 - Price Paving - Cover Page.dwg

PRINTED DATE: February 23, 2022

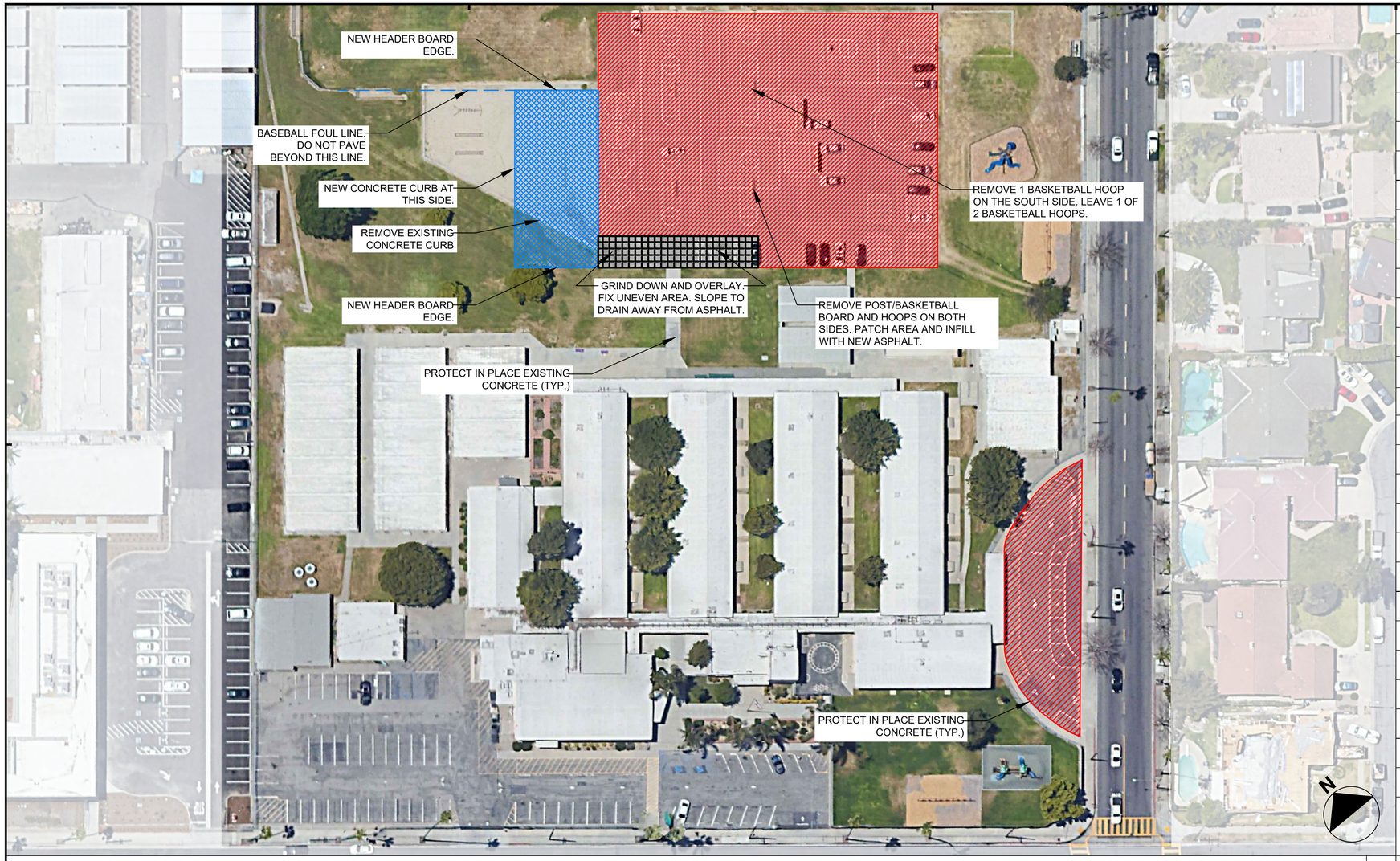

PRICE ELEMENTARY SCHOOL - SITE PLAN

1	PROTECT IN PLACE ALL CONCRETE UTILITY LIDS ON THE GROUND, EXISTING VAULTS AND HAND HOLES.
2	PROTECT IN PLACE ALL EXISTING ROOF DOWN SPOUTS.
3	REMOVE, STORE AND REINSTALL ANY EXISTING BENCHES AND LUNCH TABLES.
4	PROTECT IN PLACE ANY EXISTING FENCES AND UTILITY CONDUITS.
5	PROTECT ALL EXISTING CONCRETE, CONCRETE SIDEWALKS AND CONCRETE DRAINAGE SWALES WITHIN THE AREA OF WORK.
6	INSTALL NEW RED WOOD HEADERS ALL AROUND THE NEW ASPHALT AREAS.
7	INSTALL NEW CONCRETE WHEEL STOPS AT THE AREAS WHERE NEW ASPHALT PAVING OCCURS.
8	REPLACE ANY DAMAGED CONCRETE WHEEL STOPS AT AREAS WHERE NEW ASPHALT OR SLURRY OCCURS.
9	REPAINT / RE-STRIPE ALL PARKING LOT LINES AND OR CURBS AFFECTED INCLUDING ANY ADA PARKING. MATCH EXISTING.
10	REMOVE, STORE AND RE-INSTALL ANY BOLLARDS.
11	TEMPORARILY MOVE ANY TRASH BIN CONTAINERS OUT OF THE WAY IF SCOPE IS IN THAT AREA.
12	REPLACE ANY LANDSCAPE AREA THAT IS DAMAGED DUE TO CONSTRUCTION ACTIVITY.
13	PROTECT ALL EXISTING POLES, HANDRAILS AND ASSOCIATED FOOTINGS. IF REPLACING ASPHALT AROUND THEM, REMOVE ASPHALT BY HAND TO PROTECT FOOTINGS.
14	REMOVE DEMOLISHED MATERIALS FROM SITE AS WORK PROGRESSES. LEAVE SITE IN CLEAN CONDITION.
15	COMPLY WITH ANSI A10.6 "SAFETY CONDITIONS FOR DEMOLITION" PUBLISHED BY THE AMERICAN NATIONAL STANDARDS INSTITUTE.
16	CONDUCT DEMOLITION TO MINIMIZE INTERFERENCE WITH SURROUNDING AREAS.
17	INSTALL A SECURITY FENCE SURROUNDING PROJECT SITE AS NEEDED. COORDINATE WITH THE DISTRICT FOR LOCATION(S).
18	CONDUCT OPERATIONS WITH MINIMUM INTERFERENCE TO PUBLIC OR PRIVATE THOROUGHFARES. MAINTAIN PROTECTED INGRESS AND EGRESS AT ALL TIMES.
19	ELECTRIC OR GAS LINE CUTTING SHALL NOT BE DONE ON SITE WITHOUT A WRITTEN PERMIT.
20	EROSION CONTROL MEASURES SHALL BE IMPLEMENTED TO PREVENT DEBRIS AND UNSUITABLE MATERIALS FROM ENTERING STORM DRAIN, SANITARY SEWERS AND STREETS.
21	DUST CONTROL SHALL BE IMPLEMENTED DURING DEMOLITION.

NOTE: FOR ALL NOTES ABOVE, VERIFY ALL LOCATIONS THROUGHOUT NOTED SITE PLAN OF THE SCHOOL. (TYP.) COORDINATE WITH THE DISTRICT.

SCOPE NOTES

CRACK-FILL, SLURRY AND SEAL AREA WITH TWO COATS. REPAINT / RE-STRIPE TO MATCH EXISTING INCLUDING ADA PARKING SPACES.

NEW ASPHALT AREA. MATCH EXISTING ASPHALT GRADE. LEVEL AREA SO WATER DOES NOT POND.

GRIND DOWN AND OVERLAY. FIX UNEVEN ASPHALT AREA TO AVOID PONDING. MATCH FINISH GRADE TO EXISTING ASPHALT. NEW ASPHALT IN THIS AREA. SLOPE NEW ASPHALT TO SLOPE INTO NATURAL TURF.

NOTES

NOTE:

1. AREAS SHOWN ARE APPROXIMATE TO GIVE AN UNDERSTANDING OF THE MAGNITUDE OF THE PROJECT. DEMOLITION IS LIMITED TO WITHIN DEMOLITION LIMIT LINES, UNLESS NOTED OTHERWISE. BIDDERS MUST FIELD VERIFY ACTUAL AREAS PRIOR TO BIDDING.
2. CONTRACTOR IS TO DOCUMENT EXISTING PARKING STRIPING WITH PHOTOS, VIDEO, DRAWINGS AS THEY WILL NEED TO RE-STRIPE IT.
3. SEE SPECS FOR PAINT TYPES.
4. SEE SPECS FOR CRACK-FILL AND SLURRY COATING.
5. SEE SHEET A-03 FOR ALL CONSTRUCTION DETAILS.
6. SEE SHEET A-04 FOR ALL PARKING DETAILS.

NOT USED

Downey Unified School District

11627 Brookshire Ave, Downey • CA • 90241
562.469.6500

The Drawings, Specifications and other documents prepared by DUSD for this project are for use on the project only and may not be used (1) on any other projects, (2) for additions to this project, or (3) for the completion of this project by others, unless otherwise expressly agreed by DUSD in writing. The Drawings, Specifications and other documents prepared by DUSD for this project are exclusive property of DUSD and may not be used, duplicated, copied, transferred, assigned, sold, or hypothecated without the express written permission of DUSD. DUSD retains all common law, statutory, and other legal rights, including copyright, in and to the Drawings, Specifications and other documents prepared by DUSD.

This and all other project documents and all ideas, aesthetics and designs incorporated therein are registered property of DUSD and cannot be lawfully used in whole or in part for any project or purpose except as described in the contractual agreement between DUSD and Client. DUSD hereby gives formal notice that any such project document use, reproduction or modification (misuse) is not only unlawful but automatically binds all parties involved with misuse to fully indemnify and defend DUSD and DUSD's Consultants to the maximum legal extent against all losses, demands, claims or liabilities arising directly or indirectly from project document misuse.

Project documents described design intent or work and are not a representation of as-built or existing conditions. DUSD makes no representations concerning the accuracy or documents and are not responsible for any descrepancies between project documents and the existing conditions.

Price Elementary School

9525 Tweedy Ln, • Downey, CA • 90241

Paving Project

Project No.:

Date:

Scale:

SITE PLAN

A-01

C:\Users\Projects\Price Middle Site Projects\2022 Summer Asphalt Projects\Revit\Price A-01 - Price Paving - Site Plan.rvt

PRINTED DATE: February 23, 2022



REPAINT / RE-STRIPE TO MATCH EXISTING LAYOUT INCLUDING ADA PARKING SPACES, ARROWS, LETTERING AND NO PARKING ZONES. SEE SHEET 04 FOR ALL PARKING STRIPING DETAILS.

3	SCOPE NOTES	1	



NOTES	4	NOT USED	2

PRINTED DATE: February 23, 2022

Downey Unified School District

11627 Brookshire Ave, Downey • CA • 90241
562.469.6500

The Drawings, Specifications and other documents prepared by DUSD for this project are for use on the project only and may not be used (1) on any other projects, (2) for additions to this project, or (3) for the completion of this project by others, unless otherwise expressly agreed by DUSD in writing. The Drawings, Specifications and other documents prepared by DUSD for this project are exclusive property of DUSD and may not be used, duplicated, copied, transferred, assigned, sold, or hypothecated without the express written permission of DUSD. DUSD retains all common law, statutory, and other legal rights, including copyright, in and to the Drawings, Specifications and other documents prepared by DUSD.

This and all other project documents and all ideas, aesthetics and designs incorporated therein are registered property of DUSD and cannot be lawfully used in whole or in part for any project or purpose except as described in the contractual agreement between DUSD and Client. DUSD hereby gives formal notice that any such project documents use, reproduction or modification (misuse) is not only unlawful but automatically binds all parties involved with misuse to fully indemnify and defend DUSD and DUSD's Consultants to the maximum legal extent against all losses, demands, claims or liabilities arising directly or indirectly from project document misuse.

Project documents described design intent or work and are not a representation of as-built or existing conditions. DUSD makes no representations concerning the accuracy or documents and are not responsible for any descrepancies between project documents and the existing conditions.

Price Elementary School

9525 Tweedy Ln, • Downey, CA • 90241

Paving Project

Project No.:	
Date:	
Scale:	

STRIPING PLAN

A-02

C:\Users\Projects\Price Multiyear Bid Package\2022 Summer Asphalt Projects\Drawings\Price\A-02_Price Paving_Striping Plan.dwg

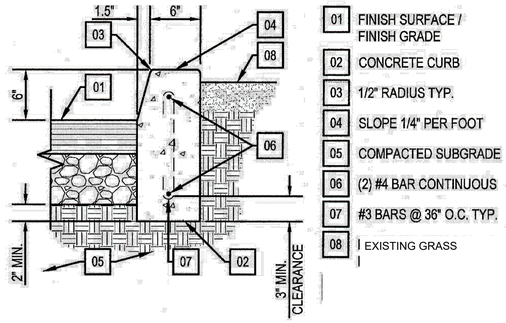

VERTICAL CONCRETE CURB SCALE: N.T.S. | 4

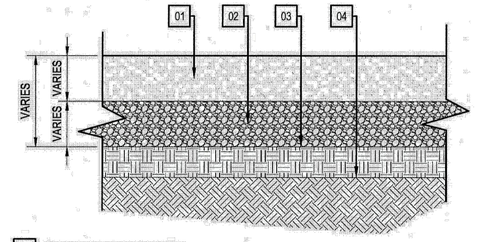

01 ASPHALT CONCRETE PAVING:
PARKING STALL PAVING - 4" THICK
DRIVE AISLE PAVING - 4" THICK
HEAVY DUTY PAVING - 6.5" THICK

02 AGGREGATE BASE:
PARKING STALL PAVING - 8" THICK
DRIVE AISLE PAVING - 11.5" THICK
HEAVY DUTY PAVING - 11.5" THICK

03 AGGREGATE BASE COMPACTED TO AT LEAST 95% RELATIVE COMPACTION.

04 SCARIFY, MOISTURE CONDITION & COMPACT 6" SUBGRADE TO AT LEAST 95% RELATIVE COMPACTION.

ASPHALT DETAIL SCALE: N.T.S. | 1

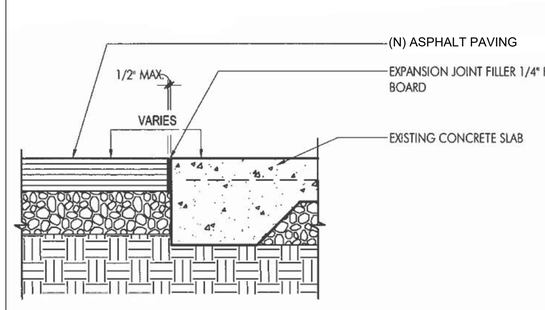

ASPHALT EDGE DETAILS - A SCALE: N.T.S. | 2

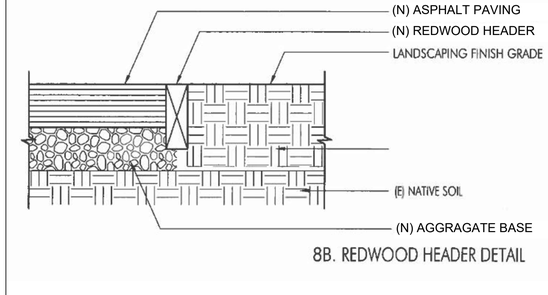

8B. REDWOOD HEADER DETAIL

ASPHALT EDGE DETAILS - B SCALE: N.T.S. | 3

DUSD
Downey Unified School District
11627 Brookshire Ave,
Downey • CA • 90241
562.469.6500

The Drawings, Specifications and other documents prepared by DUSD for this project are for use on the project only and may not be used (1) on any other projects, (2) for additions to this project, or (3) for the completion of this project by others, unless otherwise expressly agreed by DUSD in writing. The Drawings, Specifications and other documents prepared by DUSD for this project are exclusive property of DUSD and may not be used, duplicated, copied, transferred, assigned, sold, or hypothecated without the express written permission of DUSD. DUSD retains all common law, statutory, and other legal rights, including copyright, in and to the Drawings, Specifications and other documents prepared by DUSD.

This and all other project documents and all ideas, aesthetics and designs incorporated therein are registered property of DUSD and cannot be lawfully used in whole or in part for any project or purpose except as described in the contractual agreement between DUSD and Client. DUSD hereby gives formal notice that any such project documents use, reproduction or modification (misuse) is not only unlawful but automatically binds all parties involved with misuse to fully indemnify and defend DUSD and DUSD's Consultants to the maximum legal extent against all losses, demands, claims or liabilities arising directly or indirectly from project document misuse.

Project documents described design intent or work and are not a representation of as-built or existing conditions. DUSD makes no representations concerning the accuracy or documents and are not responsible for any descrepancies between project documents and the existing conditions.

Price Elementary School
9525 Tweedy Ln, • Downey, CA • 90241
Paving Project

Project No.:
Date:
Scale:

CONSTRUCTION DETAILS

A-03

C:\Project Projects\Project Models\Price Site Plan\price2022-Sumner_Asphalt Pathways\Sheets\Price A-03 - Price Paving - Asphalt Details.dwg

PRINTED DATE: February 23, 2022

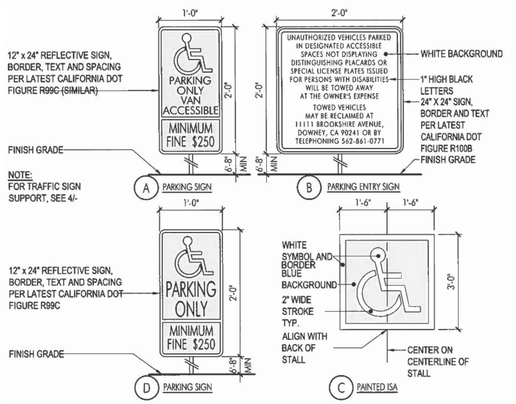

SIGNAGE SCALE: N.T.S. 4

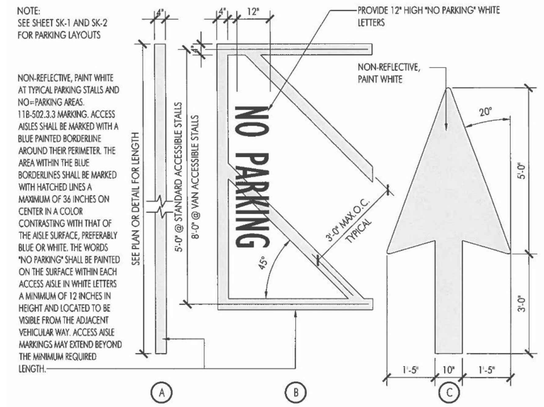

PAVEMENT MARKINGS SCALE: 1/2"=1'=0" 1

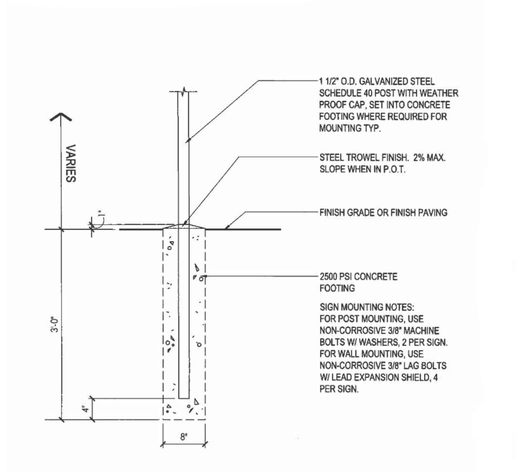

SIGN POST SCALE: 1"=1'=0" 5

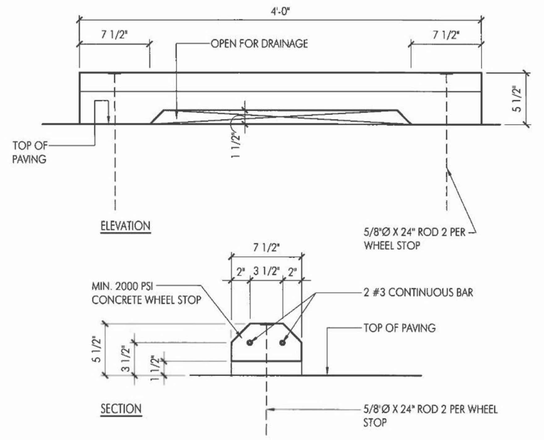

CONCRETE WHEEL STOP SCALE: 1 1/2"=1'=0" 2

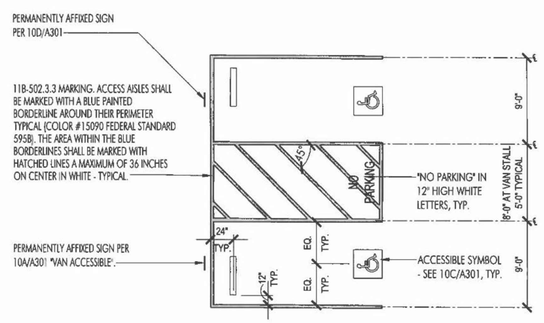

TYPICAL PARKING LAYOUT SCALE: 1/8"=1'=0" 3

DUSD
Downey Unified School District
11627 Brookshire Ave, Downey • CA • 90241
562.469.6500

The Drawings, Specifications and other documents prepared by DUSD for this project are for use on the project only and may not be used (1) on any other projects, (2) for additions to this project, or (3) for the completion of this project by others, unless otherwise expressly agreed by DUSD in writing. The Drawings, Specifications and other documents prepared by DUSD for this project are exclusive property of DUSD and may not be used, duplicated, copied, transferred, assigned, sold, or hypothecated without the express written permission of DUSD. DUSD retains all common law, statutory, and other legal rights, including copyright, in and to the Drawings, Specifications and other documents prepared by DUSD.

This and all other project documents and all ideas, aesthetics and designs incorporated therein are registered property of DUSD and cannot be lawfully used in whole or in part for any project or purpose except as described in the contractual agreement between DUSD and Client. DUSD hereby gives formal notice that any such project documents use, reproduction or modification (misuse) is not only unlawful but automatically binds all parties involved with misuse to fully indemnify and defend DUSD and DUSD's Consultants to the maximum legal extent against all losses, demands, claims or liabilities arising directly or indirectly from project document misuse.

Project documents described design intent or work and are not a representation of as-built or existing conditions. DUSD makes no representations concerning the accuracy or documents and are not responsible for any descrepancies between project documents and the existing conditions.

Price Elementary School
9525 Tweedy Ln, • Downey, CA • 90241
Paving Project

Project No.:
Date:
Scale:

PARKING DETAILS

A-04

C:\Users\Rodney.Wilson.Multiple Site Projects\2020 Summer Asphalt Projects\Revised Price\A-04 - Price Parking - Parking Details.dwg

PRINTED DATE: February 23, 2022

Downey Unified School District
Downey • California • 90241

Paving Project At:

Ward Elementary School

1. CHANGES TO THE APPROVED DRAWINGS AND SPECIFICATIONS SHALL BE MADE BY ADDENDA OR A CHANGE ORDER APPROVED BY THE SCHOOL DISTRICT.
2. SHOULD THE CONTRACTOR HAVE A QUESTION OR NEED FOR CLARIFICATION ABOUT SCOPE RELATED TO SCOPE, A FORMAL REQUEST FOR INFORMATION (RFI) WILL NEED TO BE SUBMITTED STATING SIGNIFICANT INFORMATION SUCH AS THE AREA OF SCOPE WITH REFERENCE PHOTOS AND COMPLETE QUESTION(S) / REMARKS OF THE AREA.
3. THE CONTRACTOR SHALL VERIFY THE LOCATION AND QUANTITY OF EXISTING SURFACE STRUCTURES AND SHALL BE SOLELY RESPONSIBLE FOR ANY UNIDENTIFIED UTILITIES, INCLUDING APPURTENANT FOUNDATIONS OR SUPPORTS.
4. THE CONTRACTOR SHALL WALK THE SITE PRIOR TO BIDDING, TO DETERMINE THE TRUE EXTENT OF REMOVAL WORK REQUIRED. THE CONTRACTOR SHALL VERIFY ALL DIMENSIONS AND CONDITIONS BEFORE BIDDING ON THE JOB.
5. PRIOR TO COMMENCING WORK, THE CONTRACTOR SHALL WALK THE AREAS WITH THE INSPECTOR AND DOCUMENT A LIST OF ANY EXISTING DAMAGES TO EXISTING IMPROVEMENTS. ANY DAMAGES LATER DISCOVERED THAT ARE NOT ON THIS LIST WILL BE ASSUMED TO HAVE BEEN DONE BY THE CONTRACTOR. THE CONTRACTOR SHALL BE HELD RESPONSIBLE AND BEAR THE EXPENSE FOR REPAIR OF ALL DAMAGES TO EXISTING IMPROVEMENTS.
6. IN NO CASE SHALL WORKING DIMENSIONS BE SCALED FROM PLANS, SECTIONS, OR DETAILS ON THE WORKING DRAWINGS.

GENERAL NOTES | 4

1. IT IS THE CONTRACTOR'S RESPONSIBILITY TO LOCATE AND PROTECT FROM DAMAGE ALL UTILITIES AND SUBSTRUCTURES WITHIN THE LIMITS OF NEW WORK WHETHER SHOWN OR NOT ON THE PLAN. THE CONTRACTOR WILL BE HELD RESPONSIBLE AND SHALL BEAR THE TOTAL EXPENSE OF REPAIR OR REPLACEMENT OF SAID UTILITIES AND SUBSTRUCTURES DAMAGED BY HIS OPERATION IN CONNECTION WITH EXECUTION OF THIS WORK. THE CONTRACTOR SHALL ALSO BE RESPONSIBLE FOR ALL DAMAGES TO SAID UTILITIES AND SUBSTRUCTURES AS STATED ON THESE GENERAL NOTES.
2. A NON-TOXIC NON-FLAMMABLE WEED AND GRASS KILLER SHALL BE APPLIED TO ALL GROUND AREAS BELOW NEW PAVING. THE WEED KILLER SHALL BE APPLIED AT A RATE WHICH GUARANTEES NO WEED, GRASS, PLANT, MUSHROOM, OR OTHER GROWTH TO OCCUR FOR A PERIOD OF ONE YEAR FROM DATE OF APPLICATION.
3. BURNING OF MATERIALS AND/OR USE OF EXPLOSIVES ARE NOT PERMITTED ON-SITE.
4. CONTRACTOR TO CEASE OPERATIONS AND NOTIFY THE DISTRICT IMMEDIATELY IF SURROUNDING STRUCTURES APPEAR TO BE ENDANGERED. DO NOT RESUME OPERATIONS UNTIL CORRECTIVE MEASURES HAVE BEEN TAKEN.
5. IF CONTAMINATED OR VERMIN INFECTED MATERIALS ARE ENCOUNTERED, CONTACT THE DISTRICT IMMEDIATELY AND WAIT FOR DIRECTIONS. DO NOT DISPOSE OF HAZARDOUS MATERIALS WITHOUT FURTHER DIRECTIONS FROM THE OWNER.
6. CONTRACTOR SHALL REPLACE AND PATCH ALL EXISTING SURFACES DAMAGED OR AFFECTED OUTSIDE THE DEMOLITION LIMIT LINE THAT ARE DAMAGED / AFFECTED DURING THIS CONSTRUCTION CONTRACT TO MATCH EXISTING, INCLUDING PERMANENT TRENCH RESURFACING.

GENERAL NOTES | 3

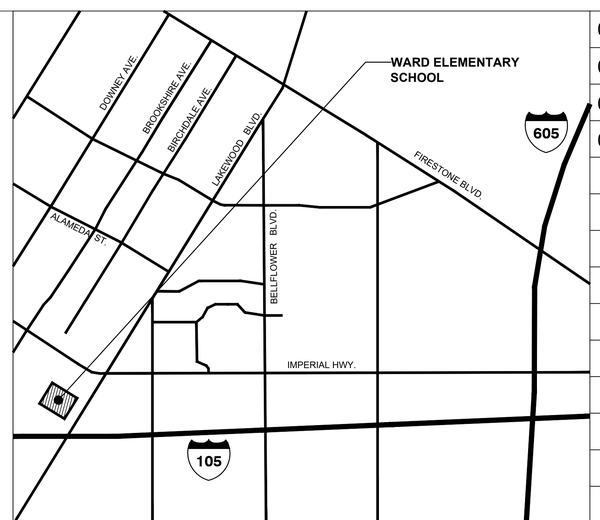

VICINITY MAP | 2

01	T-00	TITLE SHEET
02	A-01	SITE PLAN
03	A-02	STRIPING PLAN
04	A-03	PARKING DETAILS

SHEET INDEX | 1

PRINTED DATE: February 22, 2022

Downey Unified School District
11627 Brookshire Ave,
Downey • CA • 90241
562.469.6500

The Drawings, Specifications and other documents prepared by DUSD for this project are for use on the project only and may not be used (1) on any other projects, (2) for additions to this project, or (3) for the completion of this project by others, unless otherwise expressly agreed by DUSD in writing. The Drawings, Specifications and other documents prepared by DUSD for this project are exclusive property of DUSD and may not be used, duplicated, copied, transferred, assigned, sold, or hypothecated without the express written permission of DUSD. DUSD retains all common law, statutory, and other legal rights, including copyright, in and to the Drawings, Specifications and other documents prepared by DUSD.

This and all other project documents and all ideas, aesthetics and designs incorporated therein are registered property of DUSD and cannot be lawfully used in whole or in part for any project or purpose except as described in the contractual agreement between DUSD and Client. DUSD hereby gives formal notice that any such project documents use, reproduction or modification (misuse) is not only unlawful but automatically binds all parties involved with misuse to fully indemnify and defend DUSD and DUSD's Consultants to the maximum legal extent against all losses, demands, claims or liabilities arising directly or indirectly from project document misuse.

Project documents described design intent or work and are not a representation of as-built or existing conditions. DUSD makes no representations concerning the accuracy or documents and are not responsible for any descrepancies between project documents and the existing conditions.

Ward Elementary School
8851 Adoree St, • Downey, CA • 90242
Paving Project

Project No.:
Date:
Scale:

TITLE SHEET

T-00

C:\Civil Projects Data\ Active Bid Projects\2022 Summer Asphalt Projects\Spreadsheet Qs\ Ward Paving Quote Page.dgn

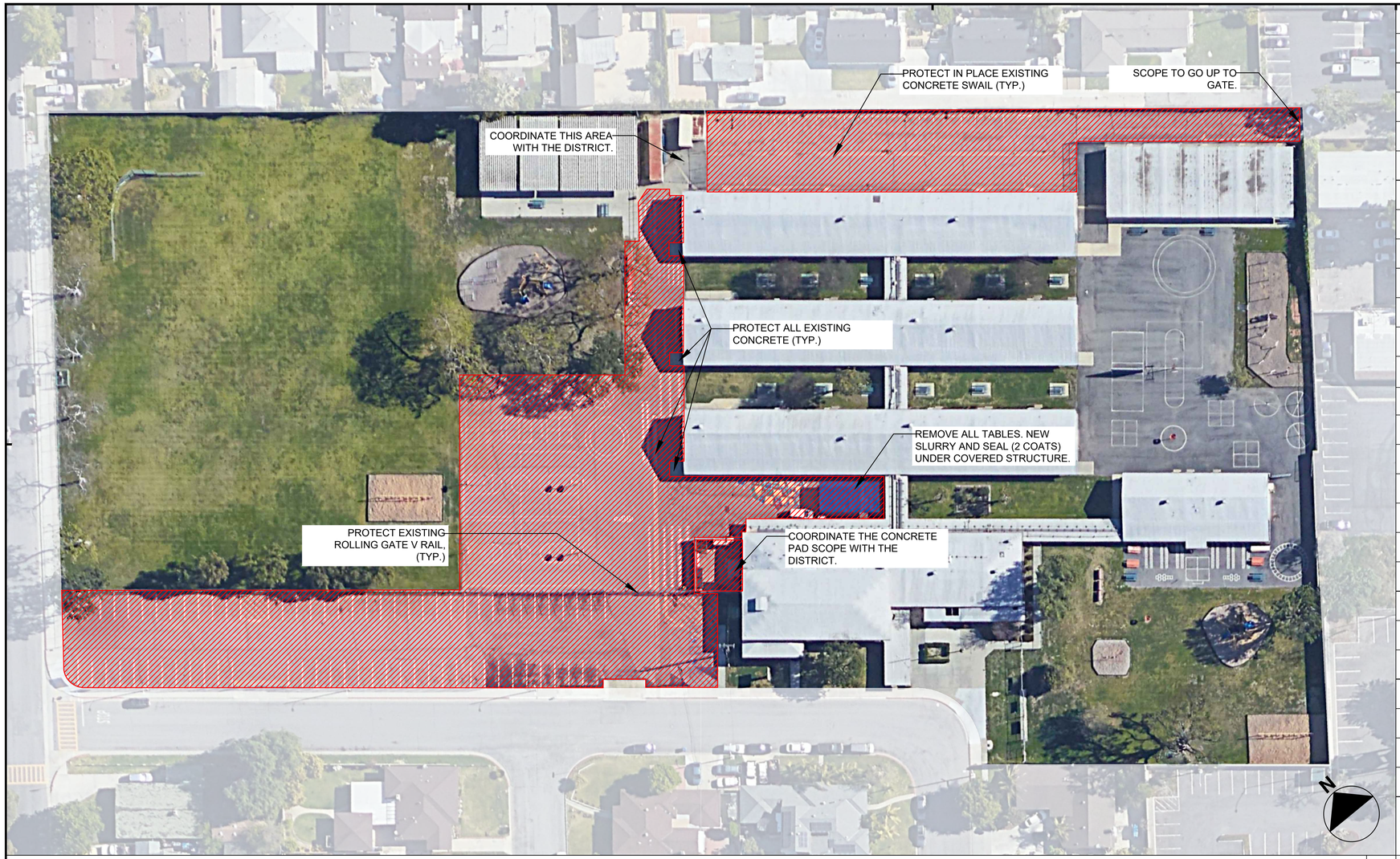

WARD ELEMENTARY SCHOOL - SITE PLAN

1	PROTECT IN PLACE ALL CONCRETE UTILITY LIDS ON THE GROUND, EXISTING VAULTS AND HAND HOLES.
2	PROTECT IN PLACE ALL EXISTING ROOF DOWN SPOUTS.
3	REMOVE, STORE AND REINSTALL ANY EXISTING BENCHES AND LUNCH TABLES.
4	PROTECT IN PLACE ANY EXISTING FENCES AND UTILITY CONDUITS.
5	PROTECT ALL EXISTING CONCRETE, CONCRETE SIDEWALKS AND CONCRETE DRAINAGE SWALES WITHIN THE AREA OF WORK.
6	REPLACE ALL CONCRETE WHEEL STOPS WHERE NEW SLURRY OCCURS.
7	REPAINT / RE-STRIPE ALL PARKING LOT LINES AND OR SIDE WALK CURBS AFFECTED INCLUDING ANY ADA PARKING. MATCH EXISTING.
8	REMOVE, STORE AND RE-INSTALL ANY BOLLARDS.
9	TEMPORARILY MOVE ANY TRASH BIN CONTAINERS OUT OF THE WAY IF SCOPE IS IN THAT AREA.
10	REPLACE ANY LANDSCAPE AREA THAT IS DAMAGED DUE TO CONSTRUCTION ACTIVITY.
11	PROTECT ALL EXISTING POLES, HANDRAILS.
12	INSTALL A SECURITY FENCE SURROUNDING PROJECT SITE AS NEEDED. COORDINATE WITH THE DISTRICT FOR LOCATION(S).
13	CONDUCT OPERATIONS WITH MINIMUM INTERFERENCE TO PUBLIC OR PRIVATE THOROUGHFARES. MAINTAIN PROTECTED INGRESS AND EGRESS AT ALL TIMES.
14	EROSION CONTROL MEASURES SHALL BE IMPLEMENTED TO PREVENT DEBRIS AND UNSUITABLE MATERIALS FROM ENTERING STORM DRAIN, SANITARY SEWERS AND STREETS.
15	DUST CONTROL SHALL BE IMPLEMENTED DURING DEMOLITION.

NOTE: FOR ALL NOTES ABOVE, VERIFY ALL LOCATIONS THROUGHOUT NOTED SITE PLAN OF THE SCHOOL. (TYP.) COORDINATE WITH THE DISTRICT.

SCOPE NOTES 1

NOT USED 2

CRACK-FILL, SLURRY AND SEAL AREA WITH TWO COATS. REPAINT / RE-STRIPE TO MATCH EXISTING INCLUDING ADA PARKING SPACES.

NOTES 4

NOTE:

1. AREAS SHOWN ARE APPROXIMATE TO GIVE AN UNDERSTANDING OF THE MAGNITUDE OF THE PROJECT. DEMOLITION IS LIMITED TO WITHIN DEMOLITION LIMIT LINES, UNLESS NOTED OTHERWISE. BIDDERS MUST FIELD VERIFY ACTUAL AREAS PRIOR TO BIDDING.
2. CONTRACTOR IS TO DOCUMENT EXISTING PARKING STRIPING WITH PHOTOS, VIDEO, DRAWINGS AS THEY WILL NEED TO RE-STRIPE IT.
3. SEE SPECS FOR PAINT TYPES.
4. SEE SPECS FOR CRACK-FILL AND SLURRY COATING.
5. SEE SHEET A-03 FOR ALL PARKING DETAILS.

Downey Unified School District

11627 Brookshire Ave, Downey • CA • 90241

562.469.6500

The Drawings, Specifications and other documents prepared by DUSD for this project are for use on the project only and may not be used (1) on any other projects, (2) for additions to this project, or (3) for the completion of this project by others, unless otherwise expressly agreed by DUSD in writing. The Drawings, Specifications and other documents prepared by DUSD for this project are exclusive property of DUSD and may not be used, duplicated, copied, transferred, assigned, sold, or hypothecated without the express written permission of DUSD. DUSD retains all common law, statutory, and other legal rights, including copyright, in and to the Drawings, Specifications and other documents prepared by DUSD.

This and all other project documents and all ideas, aesthetics and designs incorporated therein are registered property of DUSD and cannot be lawfully used in whole or in part for any project or purpose except as described in the contractual agreement between DUSD and Client. DUSD hereby gives formal notice that any such project documents use, reproduction or modification (misuse) is not only unlawful but automatically binds all parties involved with misuse to fully indemnify and defend DUSD and DUSD's Consultants to the maximum legal extent against all losses, demands, claims or liabilities arising directly or indirectly from project document misuse.

Project documents described design intent or work and are not a representation of as-built or existing conditions. DUSD makes no representations concerning the accuracy or documents and are not responsible for any descrepancies between project documents and the existing conditions.

Ward Elementary School

8851 Adoree St, • Downey, CA • 90242

Paving Project

Project No.:

Date:

Scale:

SITE PLAN

A-01

C:\Drive\Projects Files_Master Site Projects\2022 Annual Asphalt Projects\Sheets\Work Ex - Ward Paving - Site Plan.dwg

PRINTED DATE: February 23, 2022

REPAINT / RE-STRIPE TO MATCH EXISTING LAYOUT INCLUDING ADA PARKING SPACES, ARROWS, LETTERING, NO PARKING ZONES AND PLAY AREA LINES . SEE SHEET 03 FOR ALL PARKING STRIPING DETAILS.

SCOPE NOTES 1



WARD ELEMENTARY SCHOOL - STRIPING PLAN 2

DUSD

Downey Unified School District

11627 Brookshire Ave, Downey • CA • 90241
562.469.6500

The Drawings, Specifications and other documents prepared by DUSD for this project are for use on the project only and may not be used (1) on any other projects, (2) for additions to this project, or (3) for the completion of this project by others, unless otherwise expressly agreed by DUSD in writing. The Drawings, Specifications and other documents prepared by DUSD for this project are exclusive property of DUSD and may not be used, duplicated, copied, transferred, assigned, sold, or hypothecated without the express written permission of DUSD. DUSD retains all common law, statutory, and other legal rights, including copyright, in and to the Drawings, Specifications and other documents prepared by DUSD.

This and all other project documents and all ideas, aesthetics and designs incorporated therein are registered property of DUSD and cannot be lawfully used in whole or in part for any project or purpose except as described in the contractual agreement between DUSD and Client. DUSD hereby gives formal notice that any such project documents use, reproduction or modification (misuse) is not only unlawful but automatically binds all parties involved with misuse to fully indemnify and defend DUSD and DUSD's Consultants to the maximum legal extent against all losses, demands, claims or liabilities arising directly or indirectly from project document misuse.

Project documents described design intent or work and are not a representation of as-built or existing conditions. DUSD makes no representations concerning the accuracy or documents and are not responsible for any descrepancies between project documents and the existing conditions.

Ward Elementary School

8851 Adoree St, • Downey, CA • 90242

Paving Project

Project No.:

Date:

Scale:

STRIPING PLAN

A-02

PRINTED DATE: February 23, 2022

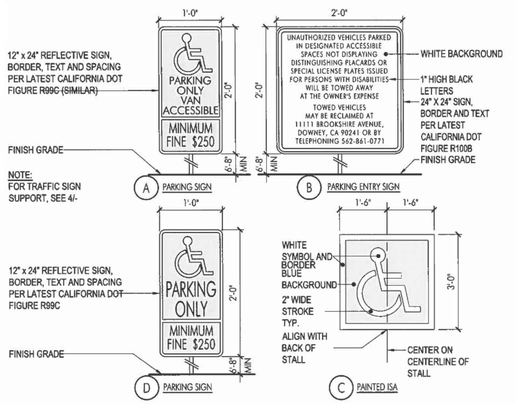

SIGNAGE SCALE: N.T.S. 4

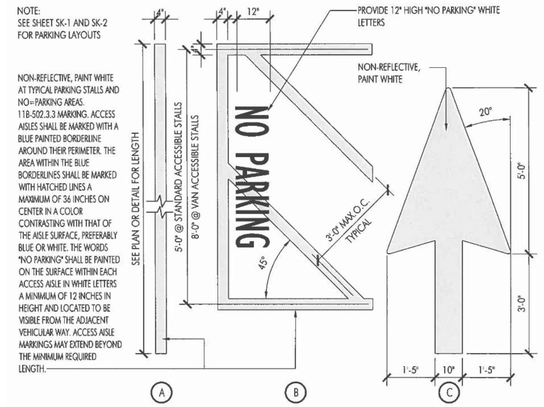

PAVEMENT MARKINGS SCALE: 1/2"=1'=0" 1

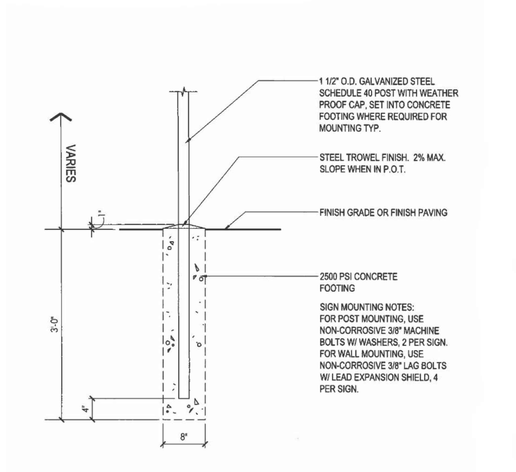

SIGN POST SCALE: 1"=1'=0" 5

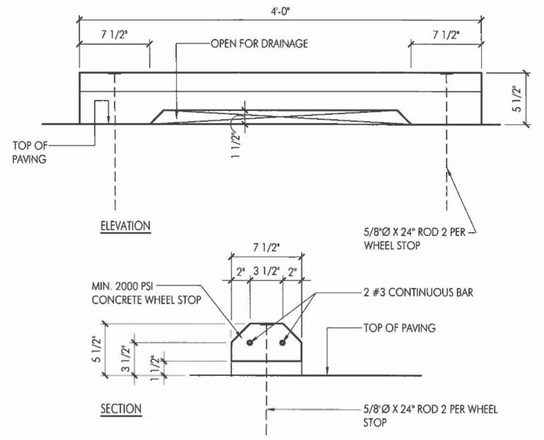

CONCRETE WHEEL STOP SCALE: 1 1/2"=1'=0" 2

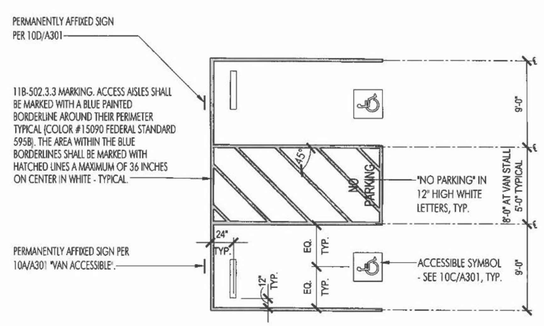

TYPICAL PARKING LAYOUT SCALE: 1/8"=1'=0" 3

DUSD
Downey Unified School District
11627 Brookshire Ave, Downey • CA • 90241
562.469.6500

The Drawings, Specifications and other documents prepared by DUSD for this project are for use on the project only and may not be used (1) on any other projects, (2) for additions to this project, or (3) for the completion of this project by others, unless otherwise expressly agreed by DUSD in writing. The Drawings, Specifications and other documents prepared by DUSD for this project are exclusive property of DUSD and may not be used, duplicated, copied, transferred, assigned, sold, or hypothecated without the express written permission of DUSD. DUSD retains all common law, statutory, and other legal rights, including copyright, in and to the Drawings, Specifications and other documents prepared by DUSD.

This and all other project documents and all ideas, aesthetics and designs incorporated therein are registered property of DUSD and cannot be lawfully used in whole or in part for any project or purpose except as described in the contractual agreement between DUSD and Client. DUSD hereby gives formal notice that any such project documents use, reproduction or modification (misuse) is not only unlawful but automatically binds all parties involved with misuse to fully indemnify and defend DUSD and DUSD's Consultants to the maximum legal extent against all losses, demands, claims or liabilities arising directly or indirectly from project document misuse.

Project documents described design intent or work and are not a representation of as-built or existing conditions. DUSD makes no representations concerning the accuracy or documents and are not responsible for any descrepancies between project documents and the existing conditions.

Price Elementary School
9525 Tweedy Ln, • Downey, CA • 90241
Paving Project

Project No.:
Date:
Scale:

PARKING DETAILS

A-03

J:\Current Projects\Price Multiple Site Projects\2022 Summer Asphalt Projects\Revised\Sheet\03_Sign Planning - Parking Details.dwg

PRINTED DATE: February 23, 2022

Downey Unified School District
Downey • California • 90241

Paving Project At:

Williams Elementary School

1. CHANGES TO THE APPROVED DRAWINGS AND SPECIFICATIONS SHALL BE MADE BY ADDENDA OR A CHANGE ORDER APPROVED BY THE SCHOOL DISTRICT.
2. SHOULD THE CONTRACTOR HAVE A QUESTION OR NEED FOR CLARIFICATION ABOUT SCOPE RELATED TO SCOPE, A FORMAL REQUEST FOR INFORMATION (RFI) WILL NEED TO BE SUBMITTED STATING SIGNIFICANT INFORMATION SUCH AS THE AREA OF SCOPE WITH REFERENCE PHOTOS AND COMPLETE QUESTION(S) / REMARKS OF THE AREA.
3. THE CONTRACTOR SHALL VERIFY THE LOCATION AND QUANTITY OF EXISTING SURFACE STRUCTURES AND SHALL BE SOLELY RESPONSIBLE FOR ANY UNIDENTIFIED UTILITIES, INCLUDING APPURTENANT FOUNDATIONS OR SUPPORTS.
4. THE CONTRACTOR SHALL WALK THE SITE PRIOR TO BIDDING, TO DETERMINE THE TRUE EXTENT OF REMOVAL WORK REQUIRED. THE CONTRACTOR SHALL VERIFY ALL DIMENSIONS AND CONDITIONS BEFORE BIDDING ON THE JOB.
5. PRIOR TO COMMENCING WORK, THE CONTRACTOR SHALL WALK THE AREAS WITH THE INSPECTOR AND DOCUMENT A LIST OF ANY EXISTING DAMAGES TO EXISTING IMPROVEMENTS. ANY DAMAGES LATER DISCOVERED THAT ARE NOT ON THIS LIST WILL BE ASSUMED TO HAVE BEEN DONE BY THE CONTRACTOR. THE CONTRACTOR SHALL BE HELD RESPONSIBLE AND BEAR THE EXPENSE FOR REPAIR OF ALL DAMAGES TO EXISTING IMPROVEMENTS.
6. IN NO CASE SHALL WORKING DIMENSIONS BE SCALED FROM PLANS, SECTIONS, OR DETAILS ON THE WORKING DRAWINGS.

GENERAL NOTES | 4

1. IT IS THE CONTRACTOR'S RESPONSIBILITY TO LOCATE AND PROTECT FROM DAMAGE ALL UTILITIES AND SUBSTRUCTURES WITHIN THE LIMITS OF NEW WORK WHETHER SHOWN OR NOT ON THE PLAN. THE CONTRACTOR WILL BE HELD RESPONSIBLE AND SHALL BEAR THE TOTAL EXPENSE OF REPAIR OR REPLACEMENT OF SAID UTILITIES AND SUBSTRUCTURES DAMAGED BY HIS OPERATION IN CONNECTION WITH EXECUTION OF THIS WORK. THE CONTRACTOR SHALL ALSO BE RESPONSIBLE FOR ALL DAMAGES TO SAID UTILITIES AND SUBSTRUCTURES AS STATED ON THESE GENERAL NOTES.
2. A NON-TOXIC NON-FLAMMABLE WEED AND GRASS KILLER SHALL BE APPLIED TO ALL GROUND AREAS BELOW NEW PAVING. THE WEED KILLER SHALL BE APPLIED AT A RATE WHICH GUARANTEES NO WEED, GRASS, PLANT, MUSHROOM, OR OTHER GROWTH TO OCCUR FOR A PERIOD OF ONE YEAR FROM DATE OF APPLICATION.
3. BURNING OF MATERIALS AND/OR USE OF EXPLOSIVES ARE NOT PERMITTED ON-SITE.
4. CONTRACTOR TO CEASE OPERATIONS AND NOTIFY THE DISTRICT IMMEDIATELY IF SURROUNDING STRUCTURES APPEAR TO BE ENDANGERED. DO NOT RESUME OPERATIONS UNTIL CORRECTIVE MEASURES HAVE BEEN TAKEN.
5. IF CONTAMINATED OR VERMIN INFECTED MATERIALS ARE ENCOUNTERED, CONTACT THE DISTRICT IMMEDIATELY AND WAIT FOR DIRECTIONS. DO NOT DISPOSE OF HAZARDOUS MATERIALS WITHOUT FURTHER DIRECTIONS FROM THE OWNER.
6. CONTRACTOR SHALL REPLACE AND PATCH ALL EXISTING SURFACES DAMAGED OR AFFECTED OUTSIDE THE DEMOLITION LIMIT LINE THAT ARE DAMAGED / AFFECTED DURING THIS CONSTRUCTION CONTRACT TO MATCH EXISTING, INCLUDING PERMANENT TRENCH RESURFACING.

GENERAL NOTES | 3

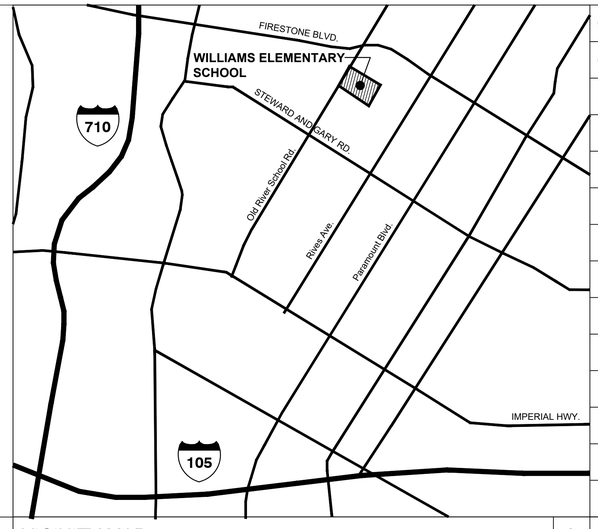

VICINITY MAP | 2

01	T-00	TITLE SHEET
02	A-01	SITE PLAN
03	A-02	STRIPING PLAN
04	A-03	PARKING DETAILS

SHEET INDEX | 1

Downey Unified School District
11627 Brookshire Ave, Downey • CA • 90241
562.469.6500

The Drawings, Specifications and other documents prepared by DUSD for this project are for use on the project only and may not be used (1) on any other projects, (2) for additions to this project, or (3) for the completion of this project by others, unless otherwise expressly agreed by DUSD in writing. The Drawings, Specifications and other documents prepared by DUSD for this project are exclusive property of DUSD and may not be used, duplicated, copied, transferred, assigned, sold, or hypothecated without the express written permission of DUSD. DUSD retains all common law, statutory, and other legal rights, including copyright, in and to the Drawings, Specifications and other documents prepared by DUSD.

This and all other project documents and all ideas, aesthetics and designs incorporated therein are registered property of DUSD and cannot be lawfully used in whole or in part for any project or purpose except as described in the contractual agreement between DUSD and Client. DUSD hereby gives formal notice that any such project documents use, reproduction or modification (misuse) is not only unlawful but automatically binds all parties involved with misuse to fully indemnify and defend DUSD and DUSD's Consultants to the maximum legal extent against all losses, demands, claims or liabilities arising directly or indirectly from project document misuse.

Project documents described design intent or work and are not a representation of as-built or existing conditions. DUSD makes no representations concerning the accuracy or documents and are not responsible for any descrepancies between project documents and the existing conditions.

Williams Elementary School
7530 Arnett St, • Downey, CA • 90241
Paving Project

Project No.:
Date:
Scale:

TITLE SHEET

T-00

PRINTED DATE: February 23, 2022

C:\Civil Projects\Paving Projects\2022 Projects\Williams Elementary School Paving\Drawings\Williams Elementary School Paving.dwg

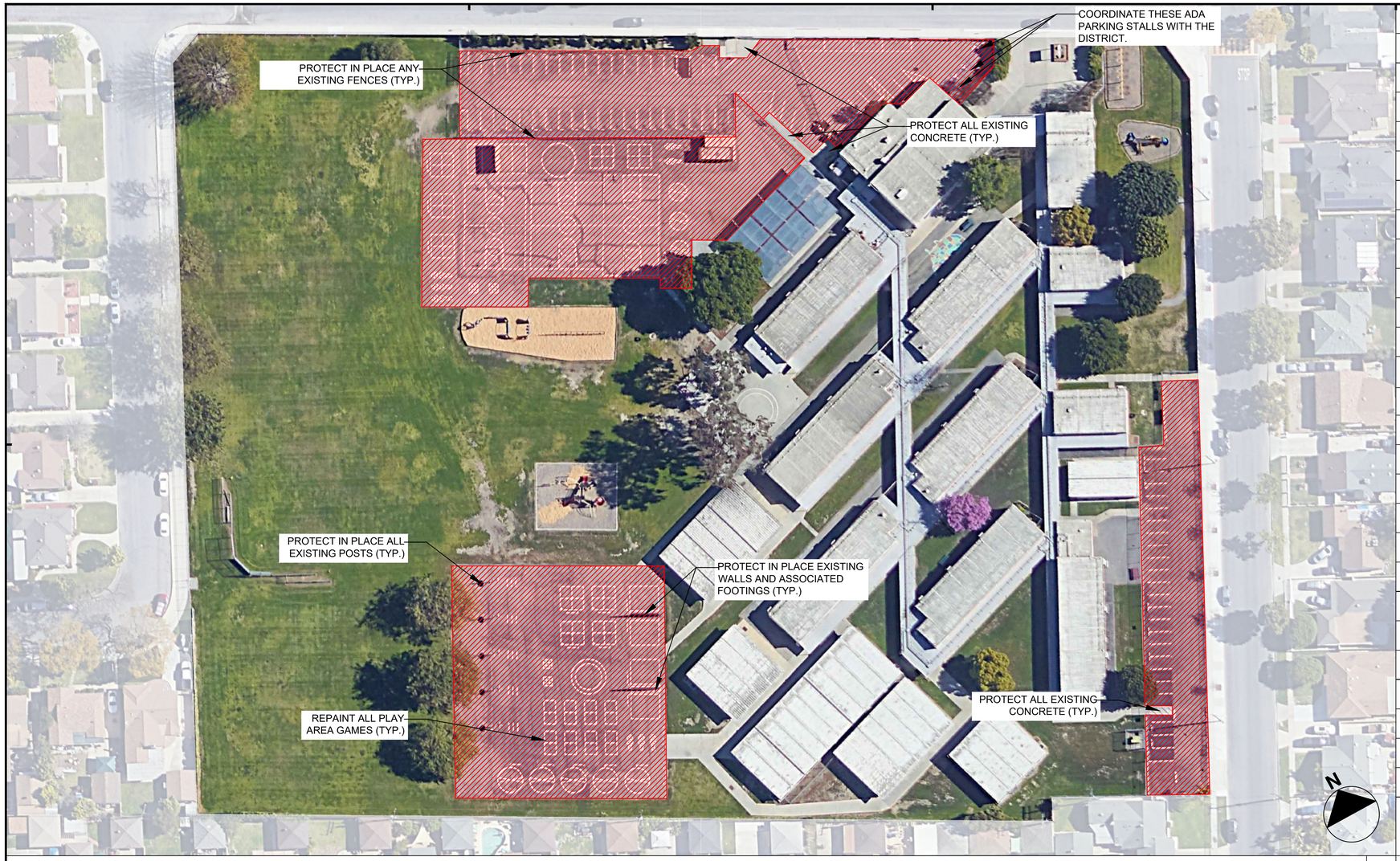

WILLIAMS ELEMENTARY SCHOOL - SITE PLAN

SCOPE NOTES

1	PROTECT IN PLACE ALL CONCRETE UTILITY LIDS ON THE GROUND, EXISTING VAULTS AND HAND HOLES.
2	PROTECT IN PLACE ALL EXISTING ROOF DOWN SPOUTS.
3	REMOVE, STORE AND REINSTALL ANY EXISTING BENCHES AND LUNCH TABLES.
4	PROTECT IN PLACE ANY EXISTING FENCES AND UTILITY CONDUITS.
5	PROTECT ALL EXISTING CONCRETE, CONCRETE SIDEWALKS AND CONCRETE DRAINAGE SWALES WITHIN THE AREA OF WORK.
6	REPLACE ALL CONCRETE WHEEL STOPS WHERE NEW SLURRY OCCURS.
7	REPAINT / RE-STRIPE ALL PARKING LOT LINES AND OR SIDE WALK CURBS AFFECTED INCLUDING ANY ADA PARKING. MATCH EXISTING.
8	REMOVE, STORE AND RE-INSTALL ANY BOLLARDS.
9	TEMPORARILY MOVE ANY TRASH BIN CONTAINERS OUT OF THE WAY IF SCOPE IS IN THAT AREA.
10	REPLACE ANY LANDSCAPE AREA THAT IS DAMAGED DUE TO CONSTRUCTION ACTIVITY.
11	PROTECT ALL EXISTING POLES, HANDRAILS.
12	INSTALL A SECURITY FENCE SURROUNDING PROJECT SITE AS NEEDED. COORDINATE WITH THE DISTRICT FOR LOCATION(S).
13	CONDUCT OPERATIONS WITH MINIMUM INTERFERENCE TO PUBLIC OR PRIVATE THOROUGHFARES. MAINTAIN PROTECTED INGRESS AND EGRESS AT ALL TIMES.
14	EROSION CONTROL MEASURES SHALL BE IMPLEMENTED TO PREVENT DEBRIS AND UNSUITABLE MATERIALS FROM ENTERING STORM DRAIN, SANITARY SEWERS AND STREETS.
15	DUST CONTROL SHALL BE IMPLEMENTED DURING DEMOLITION.

NOTE: FOR ALL NOTES ABOVE, VERIFY ALL LOCATIONS THROUGHOUT NOTED SITE PLAN OF THE SCHOOL. (TYP.) COORDINATE WITH THE DISTRICT.

NOTES

CRACK-FILL, SLURRY AND SEAL AREA WITH TWO COATS. REPAINT / RE-STRIPE TO MATCH EXISTING INCLUDING ADA PARKING SPACES.

NOTE:

1. AREAS SHOWN ARE APPROXIMATE TO GIVE AN UNDERSTANDING OF THE MAGNITUDE OF THE PROJECT. DEMOLITION IS LIMITED TO WITHIN DEMOLITION LIMIT LINES, UNLESS NOTED OTHERWISE. BIDDERS MUST FIELD VERIFY ACTUAL AREAS PRIOR TO BIDDING.
2. CONTRACTOR IS TO DOCUMENT EXISTING PARKING STRIPING WITH PHOTOS, VIDEO, DRAWINGS AS THEY WILL NEED TO RE-STRIPE IT.
3. SEE SPECS FOR PAINT TYPES.
4. SEE SPECS FOR CRACK-FILL AND SLURRY COATING.
5. SEE SHEET A-03 FOR ALL PARKING DETAILS.
6. CONTRACTOR TO COORDINATE THE ADA STALLS WITH THE DISTRICT.

NOT USED

Downey Unified School District

11627 Brookshire Ave, Downey • CA • 90241

562.469.6500

The Drawings, Specifications and other documents prepared by DUSD for this project are for use on the project only and may not be used (1) on any other projects, (2) for additions to this project, or (3) for the completion of this project by others, unless otherwise expressly agreed by DUSD in writing. The Drawings, Specifications and other documents prepared by DUSD for this project are exclusive property of DUSD and may not be used, duplicated, copied, transferred, assigned, sold, or hypothecated without the express written permission of DUSD. DUSD retains all common law, statutory, and other legal rights, including copyright, in and to the Drawings, Specifications and other documents prepared by DUSD.

This and all other project documents and all ideas, aesthetics and designs incorporated therein are registered property of DUSD and cannot be lawfully used in whole or in part for any project or purpose except as described in the contractual agreement between DUSD and Client. DUSD hereby gives formal notice that any such project document use, reproduction or modification (misuse) is not only unlawful but automatically binds all parties involved with misuse to fully indemnify and defend DUSD and DUSD's Consultants to the maximum legal extent against all losses, demands, claims or liabilities arising directly or indirectly from project document misuse.

Project documents described design intent or work and are not a representation of as-built or existing conditions. DUSD makes no representations concerning the accuracy or documents and are not responsible for any descrepancies between project documents and the existing conditions.

Williams Elementary School

7530 Arnett St, • Downey, CA • 90241

Paving Project

Project No.:

Date:

Scale:

SITE PLAN

A-01

C:\Users\Projects\Plans\Kahua Bid Projects\2022 Kahua Projects\Plans\Williams ES_Williams Paving_Site Plan.dwg

PRINTED DATE: February 23, 2022

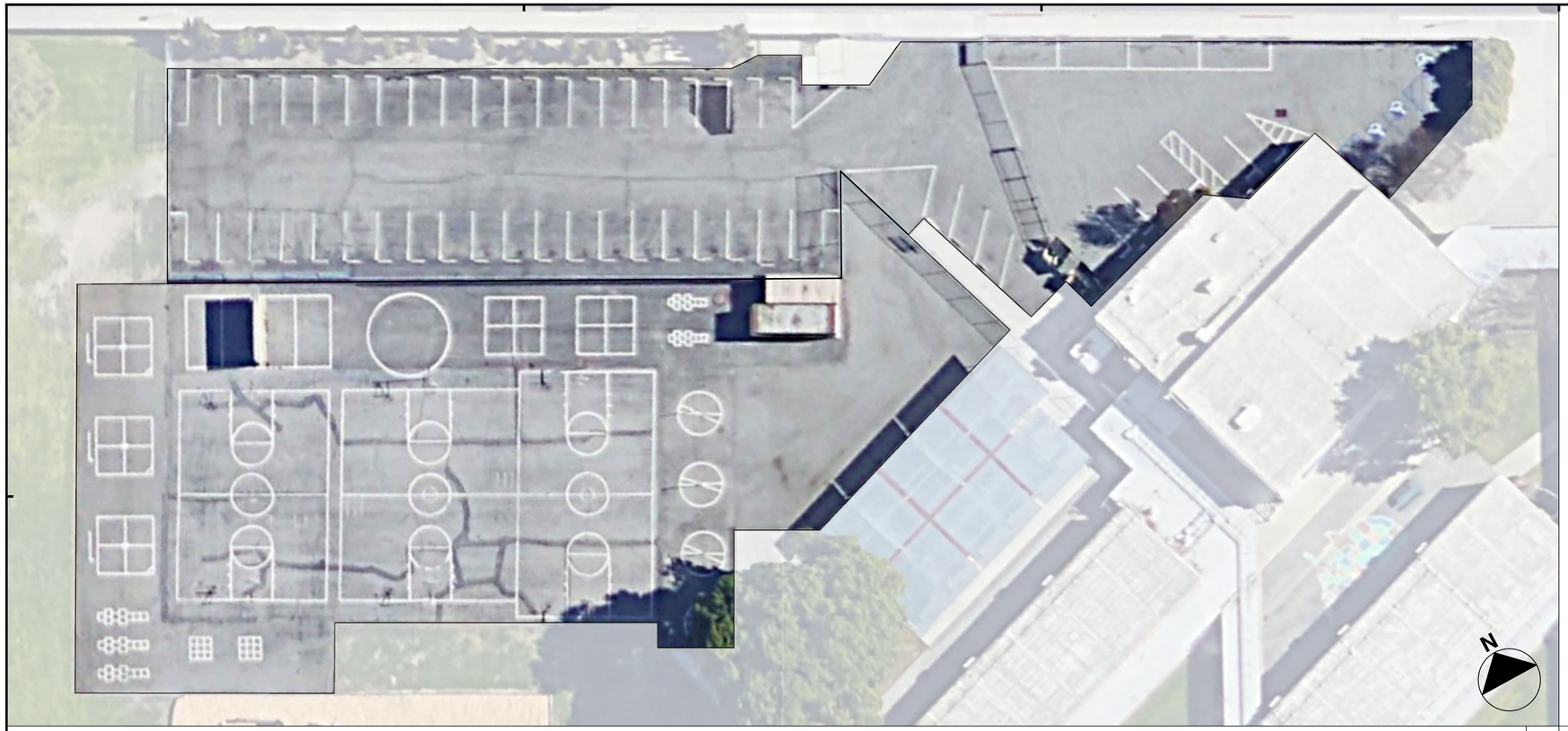

REPAINT / RE-STRIPE TO MATCH EXISTING LAYOUT INCLUDING ADA PARKING SPACES, ARROWS, LETTERING, NO PARKING ZONES AND PLAY AREA LINES . SEE SHEET 03 FOR ALL PARKING STRIPING DETAILS.

WILLIAMS ELEMENTARY SCHOOL - STRIPING PLAN | 3

SCOPE NOTES | 1

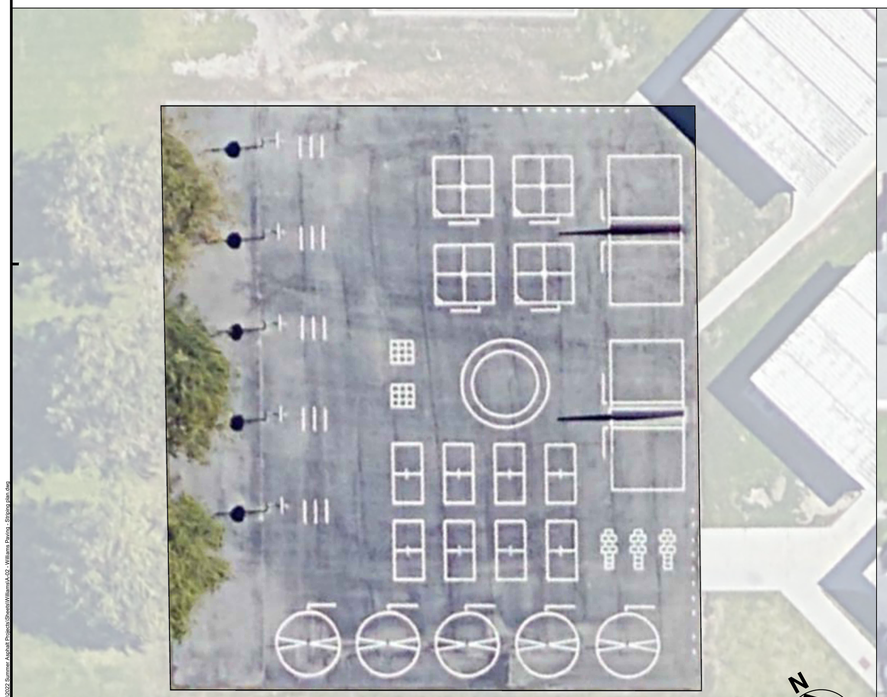

WILLIAMS ELEMENTARY SCHOOL - STRIPING PLAN | 3



WILLIAMS ELEMENTARY SCHOOL - STRIPING PLAN | 2

Downey Unified School District

11627 Brookshire Ave,
Downey • CA • 90241
562.469.6500

The Drawings, Specifications and other documents prepared by DUSD for this project are for use on the project only and may not be used (1) on any other projects, (2) for additions to this project, or (3) for the completion of this project by others, unless otherwise expressly agreed by DUSD in writing. The Drawings, Specifications and other documents prepared by DUSD for this project are exclusive property of DUSD and may not be used, duplicated, copied, transferred, assigned, sold, or hypothecated without the express written permission of DUSD. DUSD retains all common law, statutory, and other legal rights, including copyright, in and to the Drawings, Specifications and other documents prepared by DUSD.

This and all other project documents and all ideas, aesthetics and designs incorporated therein are registered property of DUSD and cannot be lawfully used in whole or in part for any project or purpose except as described in the contractual agreement between DUSD and Client. DUSD hereby gives formal notice that any such project documents use, reproduction or modification (misuse) is not only unlawful but automatically binds all parties involved with misuse to fully indemnify and defend DUSD and DUSD's Consultants to the maximum legal extent against all losses, demands, claims or liabilities arising directly or indirectly from project document misuse.

Project documents described design intent or work and are not a representation of as-built or existing conditions. DUSD makes no representations concerning the accuracy or documents and are not responsible for any descrepancies between project documents and the existing conditions.

Williams Elementary School

7530 Arnett St, • Downey, CA • 90241

Paving Project

Project No.:

Date:

Scale:

STRIPING PLAN

A-02

C:\Users\Rocio\Box\Work_Box Projects\2022\Current Active Projects\Downey\Williams ES_Williams Paving_Striping.dwg

PRINTED DATE: February 23, 2022

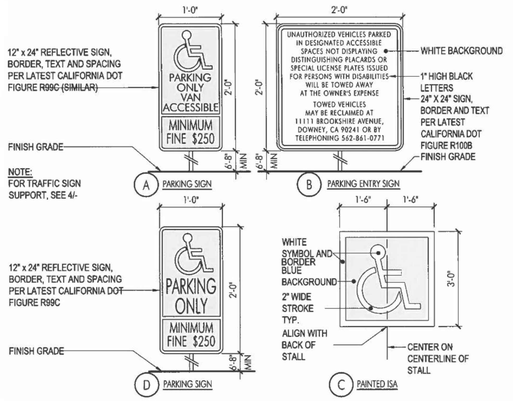

SIGNAGE SCALE: N.T.S. 4

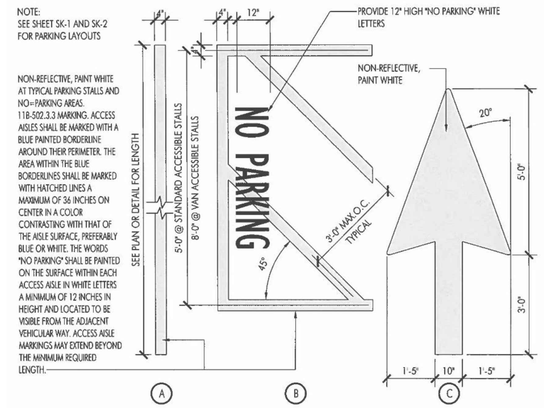

PAVEMENT MARKINGS SCALE: 1/2"=1'=0" 1

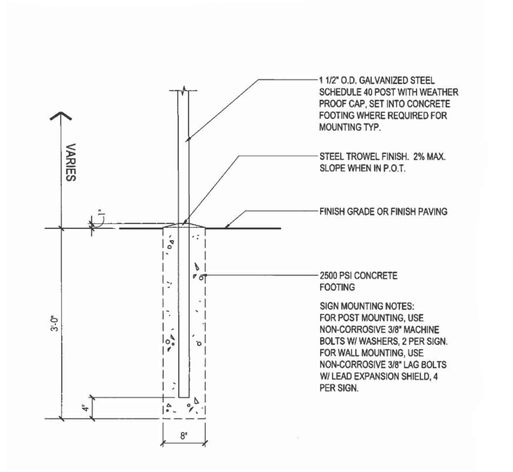

SIGN POST SCALE: 1"=1'=0" 5

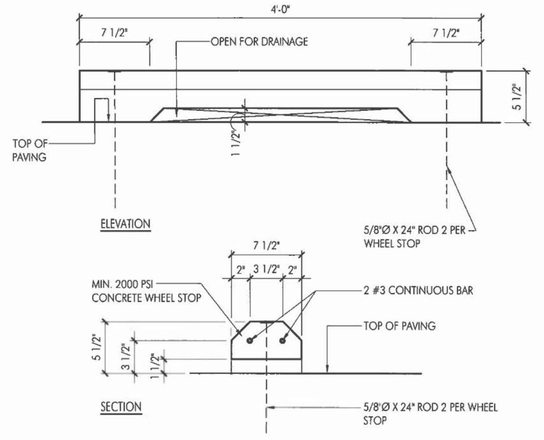

CONCRETE WHEEL STOP SCALE: 1 1/2"=1'=0" 2

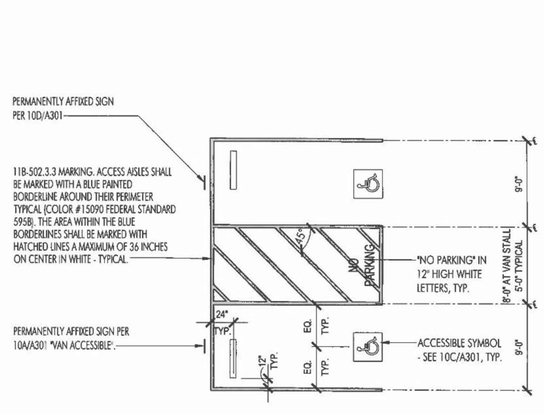

TYPICAL PARKING LAYOUT SCALE: 1/8"=1'=0" 3

DUSD
Downey Unified School District
11627 Brookshire Ave, Downey • CA • 90241
562.469.6500

The Drawings, Specifications and other documents prepared by DUSD for this project are for use on the project only and may not be used (1) on any other projects, (2) for additions to this project, or (3) for the completion of this project by others, unless otherwise expressly agreed by DUSD in writing. The Drawings, Specifications and other documents prepared by DUSD for this project are exclusive property of DUSD and may not be used, duplicated, copied, transferred, assigned, sold, or hypothecated without the express written permission of DUSD. DUSD retains all common law, statutory, and other legal rights, including copyright, in and to the Drawings, Specifications and other documents prepared by DUSD.

This and all other project documents and all ideas, aesthetics and designs incorporated therein are registered property of DUSD and cannot be lawfully used in whole or in part for any project or purpose except as described in the contractual agreement between DUSD and Client. DUSD hereby gives formal notice that any such project documents use, reproduction or modification (misuse) is not only unlawful but automatically binds all parties involved with misuse to fully indemnify and defend DUSD and DUSD's Consultants to the maximum legal extent against all losses, demands, claims or liabilities arising directly or indirectly from project document misuse.

Project documents described design intent or work and are not a representation of as-built or existing conditions. DUSD makes no representations concerning the accuracy or documents and are not responsible for any descrepancies between project documents and the existing conditions.

Williams Elementary School
7530 Arnett St, • Downey, CA • 90241
Paving Project

Project No.:
Date:
Scale:

PARKING DETAILS

A-03

C:\Users\Rebecca.Flores\Autodesk Docs\Projects\2022 Summer Asphalt Projects\Drawings\Williams ES - Williams Paving - Parking Details.dwg

PRINTED DATE: February 23, 2022